CONAE Ground Segment

GSD – DSN

AS - SAC-D Ground System to Aquarius Ground System (incl. NEN) Interface Control Document (ICD)

Authors: **M. Erazú, H. Tiraboschi, E. Romero**

Document Code: **GS-GSD-DSN-IC-00400-G (AS-336-0151)**

DATE: April 1st, 2011

COMISION NACIONAL DE ACTIVIDADES ESPACIALES
ARGENTINA

PREPARED BY:

M. Erazú
GSE&A Engineer –CONAE — Date

H. Tiraboschi
SAC-D GS System Engineer – CONAE — Date

E. Romero
GSE&A Engineer – CONAE — Date

CHECKED BY:

S. Kennison
Aquarius GS System Engineer - CONAE — Date

Deborah.L.Dukes
HTSI - Near Earth Network Performance Analyst Office — Date

H. Tiraboschi
SAC-D GS System Engineer – CONAE — Date

C. Falcón
SAC-D MSE – CONAE — Date

APPROVED BY:

G. Feldman
Aquarius GS Manager - NASA — Date

Kenneth Wentand
Mission Commitment Engineer - NASA — Date

Rivers Lamb
FDF Deputy Operations Director - NASA — Date

C. Filici
SAC-D GS Manager - CONAE — Date

D. Caruso
SAC-D Project Manager - CONAE

Date

Distribution List

ORGANIZATION	NAME	FUNCTION
NASA/JPL	Amit Sen	Aquarius Project Manag
NASA/JPL	David Durham	Aquarius System Eng.
NASA	Gene Feldman	Aquarius GS Manager
NASA	Susie Kennison	Aquarius GS Eng
CONAE	Daniel Caruso	SAC-D/Aq Project Manager
CONAE	Carlos Falcon	SAC-D/Aq Mission System Eng.
CONAE	Marcelo Oglietti	SAC-D/Aq Mission Operation Manager
CONAE	Cristian Filici	GS Eng. Unit Manager
CONAE/STI	Hernán Tiraboschi	GS & MOC System Eng.
CONAE/STI/VENG	Mariano Della Nina	SAC-D Flight Ops. Team Coordinator
CONAE	Eduardo Romero	SAC-D Flight Ops. Team Coordinator Deputy
CONAE/Ascentio	Cristian Senyk	IAOD Coordinator
CONAE/STI/VENG	Mauricio Lange	OCS ATLO-3 Coordinator
CONAE/STI	Maximiliano Erazú	OCS ATLO-4 Coordinator
CONAE/STI	Abigail Ganopol	OFEO Coordinator
CONAE	Mario Lamfri	OFEO Coordinator Deputy
CONAE/Ascentio	Juan Maza	EMRO Coordinator

La Comisión Nacional de Actividades Espaciales (CONAE) de Argentina tiene los derechos sobre este documento, el cual es confidencial y no será usado para ningún otro propósito, salvo para el que fue suministrado y sólo podrá ser reproducido, copiado o transmitido, en todo o en parte, para el uso interno de CONAE, sea directamente o a través de terceros que mantengan acuerdos de confidencialidad con CONAE.
Cualquier otra persona diferente de la persona autorizada, que consiga el documento por haberlo encontrado o por otra causa, deberá enviarlo junto con su nombre y dirección en un sobre cerrado a:

Comisión Nacional de Actividades Espaciales (CONAE) from Argentina owns the copyright of this document which is supplied in confidence and which shall not be used for any purpose other than that for which it is supplied and shall be only reproduced, copied or communicated, in whole or in part, for internal use of CONAE, directly or by third parties holding confidentiality agreements with CONAE.
Any person other than the authorized holder obtaining possession of this document by finding or otherwise, should send it, together with his name and address, in a sealed envelope to:

Comisión Nacional de Actividades Espaciales (CONAE)
Unidad de Garantía de Calidad
Dirección Ejecutiva y Técnica
Av. Paseo Colón 751
(1063) Capital Federal
ARGENTINA

Envíese a franquear en destino. Otros franqueos serán reembolsados.
Letter postage need not be prepaid. Other postage will be refunded.

Document Changes Record

All changes and revisions to this document will be approved by the System Engineer, the Project Manager and the Quality Assurance Manager.

Docum. Version	Date	Section	Reason for Revision
G	04/2011	2.2.1	message contents updated
G	04/2011	2.3	SAC-D MOC products and reports added
G	04/2011	2.3.3	Data Files availability
G	04/2011	2.4.1	Ground Station Contacts Details product is deleted
G	04/2011	2.7	product format and delivery requirements changed, user and directory to access fdf server updated
G	04/2011	2.8	TLE delivery folder changed, format is TXT
G	04/2011	3	section rewritten for clarification, SFTP transference is back up by email and phone, SG2 antenna added as SKS
G	04/2011	6.9	Quaternions reference system defined

TABLE OF CONTENTS

1.0 INTRODUCTION....10

1.1 Purpose....10

1.2 Scope....10

1.3 Acronyms and abbreviations....10

1.4 Applicable documents....11

1.5 Reference documents....11

1.6 Notation....11

1.7 Overview of this document....12

1.8 Context....12

2.0 INTERFACE DESCRIPTION....15

2.1 I-ACCS-MOC/SOP....15
2.1.1 Action Requests timeline....15
2.1.2 Action Requests and Reports interface (ACCS-SOP_AR)....16
2.1.3 E-mail Interface (I-ACCS-MOC/SOP_MAIL)....19

2.2 I-ACCS-MOC/SOC....19
2.2.1 Off Standard Issues, e-mail interface (ACCS-SOC_EMAIL)....20
2.2.2 Off Standard Issues, phone interface (I-ACCS-MOC/SOC_VOICE)....20

2.3 I-ADPS-CUSS/ACD....21
2.3.1 Data files retrieval interface....21
2.3.2 Published Data Files....21
2.3.3 Location and Naming Convention....22
2.3.3.1 MWR Level 1 Ancillary Data packed file contents....23
2.3.3.2 SAC-D MOC products and reports format....24

2.4 I-ADPS-CODS/DI....24
2.4.1 Orbit Dynamics Products List....24

2.5 I-NEN-MOC/FC....27
2.5.1 Telemetry and Telecommand interfaces (I-MOC/FC-NEN_TM, I-MOC/FC-NEN_TC)....27
2.5.2 Voice interface (I-MOC/FC-NEN_VOICE)....27

2.6 I-MOC/SOP-NEN....27

2.7 I-CODS/DI-FDF....28
2.7.1 Commissioning Orbit Dynamics Products List....29
2.7.2 Commissioning Orbit Dynamics Products, SFTP interface (I-CODS/DI-FDF_SFTP)....31
2.7.3 Commissioning Orbit Dynamics Products, email interface (I-CODS/DI-FDF_EMAIL_OD)....31
2.7.4 Commissioning Orbit Dynamics Products, fax interface (I-CODS/DI-FDF_FAX)....31
2.7.5 Actual Launch Time, voice interface (I-CODS/DI-FDF_VOICE)....31
2.7.6 Actual Launch Time, email interface (I-CODS/DI-FDF_EMAIL_LTIME)....32

2.8 I-CODS/DI-NEN **32**
2.8.1 Orbit Dynamics Products List 34

3.0 NEN TO SAC-D MOC SCHEDULING **35**

3.1 General **35**
3.1.1 Definitions 36
3.1.1.1 Planning/Strawman schedule SAC-D MOC request 36
3.1.1.2 Forecast schedule 37
3.1.1.3 Operations Schedule 37
3.1.1.4 Forecast week 38
3.1.1.5 Operations week 38
3.1.1.6 Ground Network Availability (NAM and GNSTAT) 38

3.2 Schedule arrangement **39**
3.2.1 SAC-D MOC schedule additions – u-file 39
3.2.1.1 NENSO messages: confirmation and denial of additions 40
3.2.2 SDMOC routine schedule Deletions 40
3.2.3 NENSO routine schedule additions 40
3.2.4 NENSO routine schedule deletions 40

3.3 Files Main Exchange Method **42**
3.3.1 File Structure 42
3.3.2 File Naming Convention 42

3.4 Files Back up Exchange Method **43**

3.5 Scheduling by phone **43**

3.6 NEN stations for Aquarius/SAC-D **43**

4.0 INTERFACES DURING THE LAUNCH CAMPAIGN **44**

4.1 I-AQGS-GSETB **45**
4.1.1 I-AQIHC-GSETB/SOC 46
4.1.1.1 OBS HKTM interface (AQIHC-GSETBSOC_TM) 46
4.1.1.2 Command Script interface (AQIHC-GSETBSOC_CS) 47
4.1.1.3 Script Execution Report interface (AQIHC-GSETBSOC_SER) 47
4.1.2 I-AQIHC-GSETB/SFTPS 47

5.0 ANEX 1 – PTP FORMATS **48**

5.1 EOS Command Delivery Format for SACD **48**

5.2 SMEX Telemetry Delivery Format for SACD **49**

5.3 NASA PB-5 Time Code Format **50**

6.0 ANNEX 2 – ORBIT DYNAMICS PRODUCTS FORMATS **52**

6.1 TLE **52**
6.1.1 Naming Convention 52
6.1.2 Format Description 52
6.1.3 File Example 53

6.2 Predicted Ephemeris and Orbit Ephemeris **53**
6.2.1 Naming Convention 53
6.2.2 Format Description 54
6.2.3 File Example 55

6.3 FDF State Vector **56**
6.3.1 Format Description 56
6.3.2 File Example 57

6.4 Ground Station Contacts **57**
6.4.1 Naming Convention 57
6.4.2 Format Description 57
6.4.3 File Example 59

6.5 South Atlantic Anomaly Passes **59**
6.5.1 Naming Convention 59
6.5.2 Format Description 59
6.5.3 File Example 60

6.6 Eclipses **60**
6.6.1 Naming Convention 60
6.6.2 Format Description 60
6.6.3 File Example 61

6.7 Events **61**
6.7.1 Naming Convention 61
6.7.2 Format Description 62
6.7.3 File Example 62

6.8 Maneuvers List **62**
6.8.1 Naming Convention 62
6.8.2 Format Description 63
6.8.3 File Example 64

6.9 AOCS Quaternions **64**
6.9.1 Format Description 64
6.9.2 Quaternion File Example 64

6.10 Selected File Examples **65**

7.0 ANNEX 3 ..... **67**

7.1 SDMOC Initial Schedule Request Example i-file (single spaced and no spaces between commas) **67**

7.2 Forecast Schedule Example s-file **67**

7.3 Update schedule example u-file format (single spaced and no spaces between commas) **68**

7.4 Forecast Schedule Example s-file (single spaced and no spaces between commas) **68**

7.5 Unavailability Examples are Provided to the MOC by the Ground Network **69**

1.0 Introduction

1.1 Purpose

This document describes the hardware, software and human interfaces between the SAC-D Ground Segment and the Aquarius Ground System (AQ GS). As well as, the facilities involved, the data exchange formats, communications channels and protocols that encompass all identified Mission Operations scenarios including Launch operations.
This document also includes the interfaces between the SACD Ground Segment and the NASA Ground Network (NGN) and between the SACD Ground Segment and FDF.
The SAC-D Ground Segment consists of the CONAE`s systems provided for the Aquarius/SAC-D Mission. The Aquarius Ground System consists of NASA´s systems. The NGN is considered an external support network

1.2 Scope

The ICD documentation for the Aquarius/SAC-D Mission that describes in detail the external interfaces (between CONAE systems and foreign systems) is a set of four documents shown in Figure 1-1 in green, among them (highlighted in red) is this document.

This document shall be consulted as the main reference on the definition of the interfaces between the SAC-D Ground Segment and the Foreign Segment (NGN and AQGS).

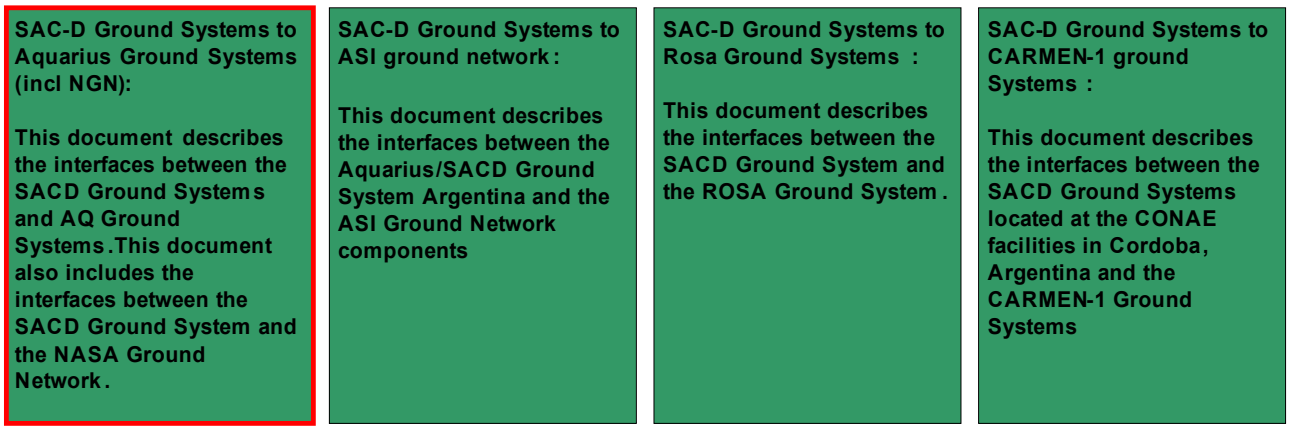

Figure 1-1: CONAE external ICD with foreign partners

1.3 Acronyms and abbreviations

The following acronyms and abbreviations are used in the present document.

Acronyms & Abb.	Description
ACCS	Aquarius Command and Control System
ADPS	Aquarius Data Processing System
AOS	Aquisition Of Signal
AQGS	Aquarius Ground Segment
AR	Action Request
CODS	CONAE Orbit dynamics

CUSS	CONAE User Segment Service
DOY	Day Of Year
EU	Engineering Unit
FC	Flight Control
FDF	Flight Dynamics Facility
FGSS	Foreign Ground Stations Service
HKTM	Housekeeping Telemetry
GS	Ground Station
GSD	SAC-D Ground Segment project
GUI	Graphic User Interface
MOC	Mission Operations Center
MWR	Microwave Radiometer
NAM	Network Advisory message
NGN	NASA Ground Network
NEN	Near Earth Network
NENSO	NEN Scheduling Office
RT	RealTime
SCL	Spacecraft Control Language
SDMOC	SAC-D MOC
SOC	Spacecraft Operations Center
SOP	Spacecraft Operations Planning
XPNet	XML controllable Processes Network
WOTIS	Wallops Orbital Tracking and Information System

1.4 Applicable documents

The following documents are applicable for the present paper.

ID	Code	Title
AD.1.	*SD-334-0138*	SD - Observatory to Ground Interface Specification
AD.2.	SCGHB-0010C	CAS SCL Reference Manual
AD.3.	SCGGU-0020C	CAS SCL User's Guide
AD.4.	GS-MSD-DSN-SP-00100-A	MOC Product Tree

1.5 Reference documents

N/A

1.6 Notation

We describe the notation we use to identify the interfaces between the various systems, subsystems and units. We exemplify this for two systems named A and B.
The interface between any two systems A and B is identified using the following notation:

I-A-B

To avoid duplication of these identifications, it is mandatory to write "A" before the "B", i.e. the systems after the "I" are written in alphabetical order. So, I-B-A is not a valid name.
The name of the systems and subsystems can contain numbers. In this case, we use the

alphanumeric order in which any number has precedence over letters. So, the interface between a system called 1A and one called A is I-1A-A.
In case we are identifying part of this interface, for example, between a Subsystem S1 of A and B, we add "/S1" at the side of the A:

I-A/S1-B

So, I-A/S1-B/S2 identifies the interface between Subsystem S1 of System A and Subsystem S2 of system B.
We identify the interface between two Subsystems S1 and S2 of the same system A as follows:

I-A/S1-/S2

In parallel, in case we are identifying part of this interface, for example, between a Unit U1 of Subsystem S1 of System A and System B, we add "/S1/U1" at the side of the A:

I-A/S1/U1-B

So, I-A/S1/U1-B/S2/U2 identifies the interface between Unit U1 of Subsystem S1 of System A and Unit U2 of Subsystem S2 of system B.
We identify the interface between two Units U1 and U2 of subsystem S1 of any system A as follows:

I-A/S1/U1-//U2

1.7 Overview of this document

This document is organized as follows: Section 1 provides an introduction, Section 2 describes the interfaces between the SAC-D Ground System and the Aquarius Ground System. Section 3 describes the interfaces during the Launch Campaign and sections 4 to 6 are annexes with detailed file format specifications.

1.8 Context

The following diagram (Figure 1-2: AQ/SAC-D GS) shows the ground segment architecture for the Aquarius/SAC-D mission. In this diagram which has a considerable level of abstraction we can see foreign systems (green boxes) and CONAE systems (blue boxes). Foreign systems are those provided by foreign partners. The set of foreign systems are named as foreign segments.
The background colors of the diagram are used to show which systems are at CONAE locations (blue background) and which are at foreign locations (green background).

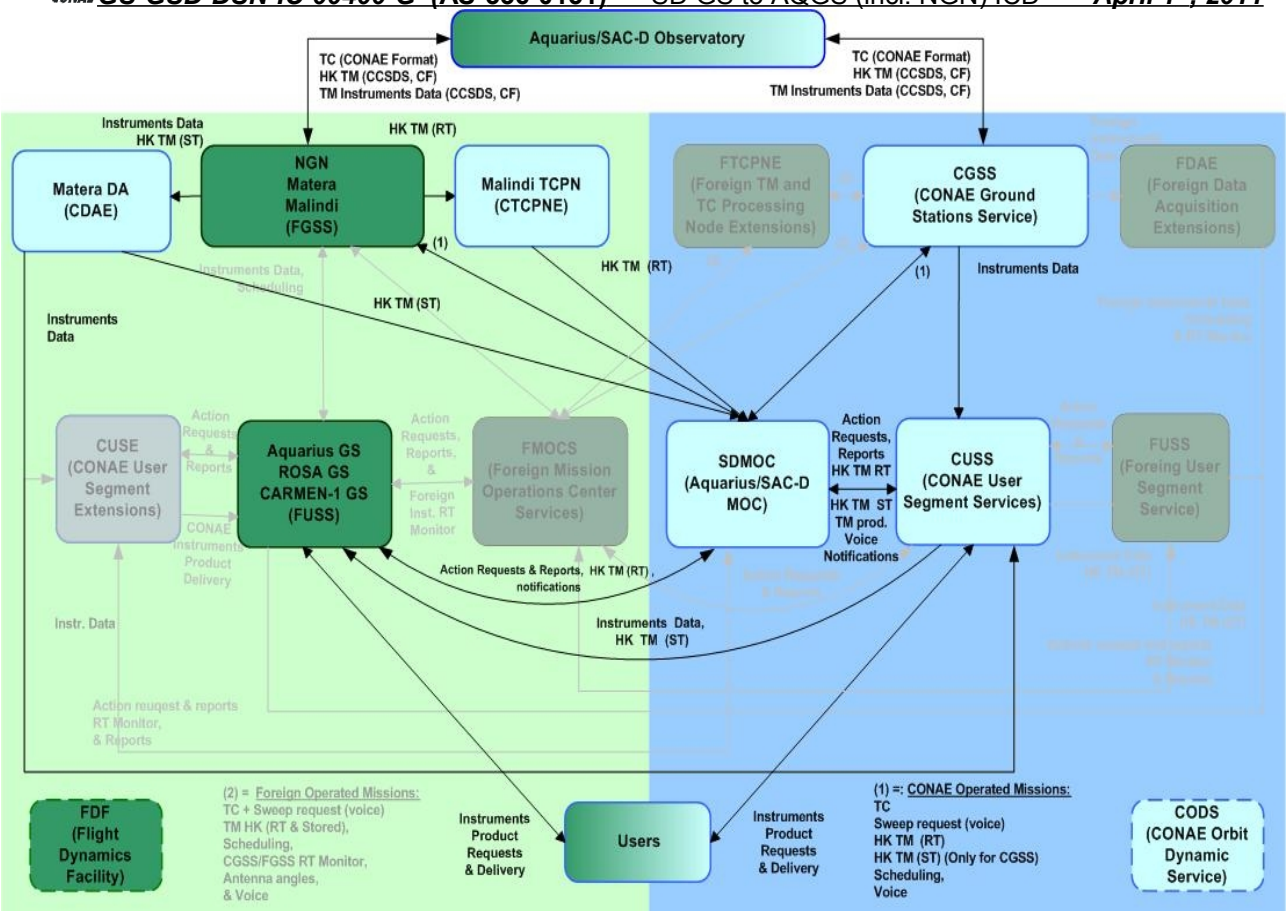

Figure 1-2: AQ/SAC-D GS

In Figure 1-3 is shown part of the subsystem level of this diagram. There we can see in detail how the systems belonging to Aquarius ground systems interact with the CONAE subsystems.

This diagram is partial and it is only to show the external interfaces. These external interfaces are the main subject of the document. The arrows shown in the diagrams represent the interfaces that will be fully described in the followings sections.

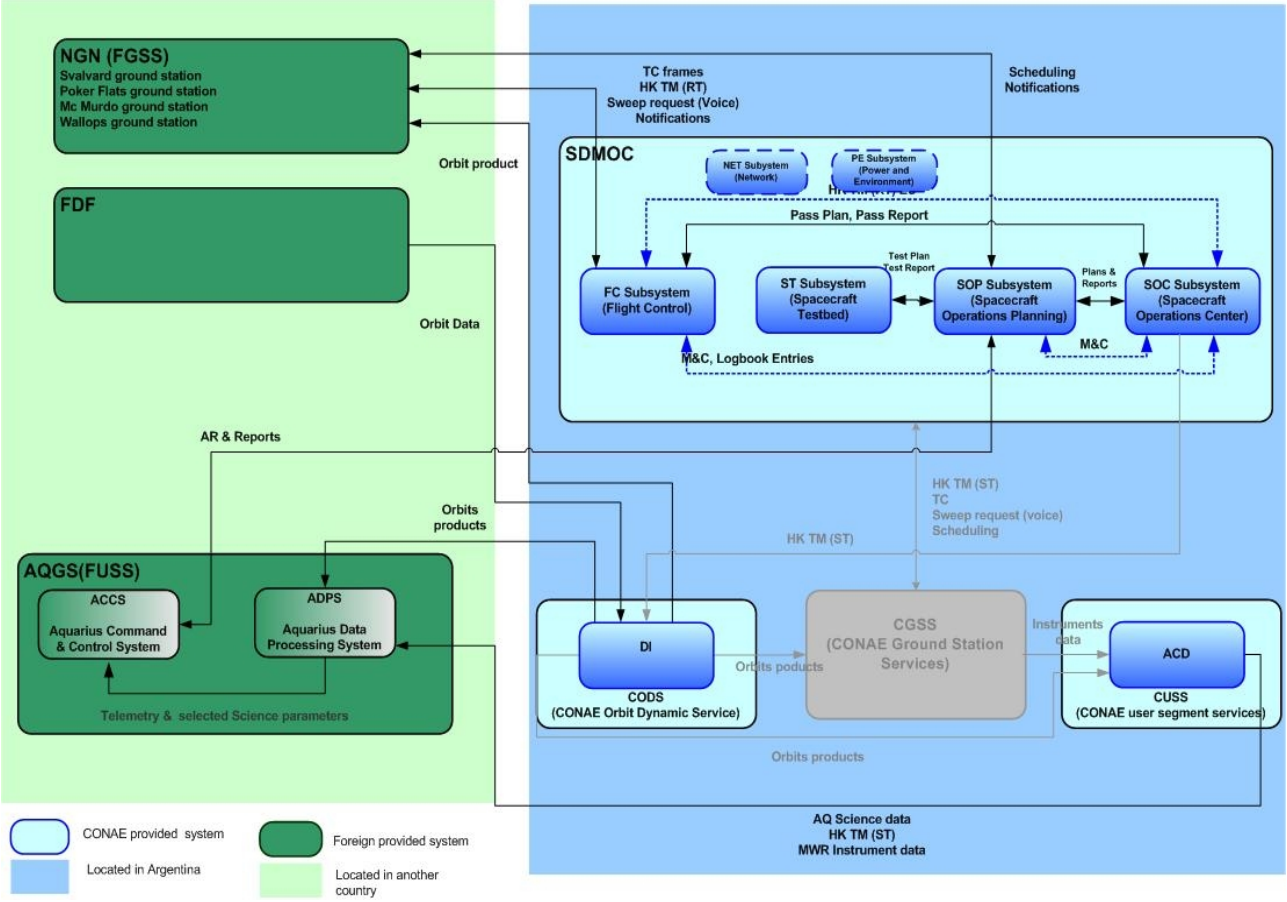

Figure 1-3: AQGS to SDGS partial diagram focusing in external interfaces

The Ground Support Equipment architecture is shown in Figure 1-4. This equipment will support I&T and Launch campaign.

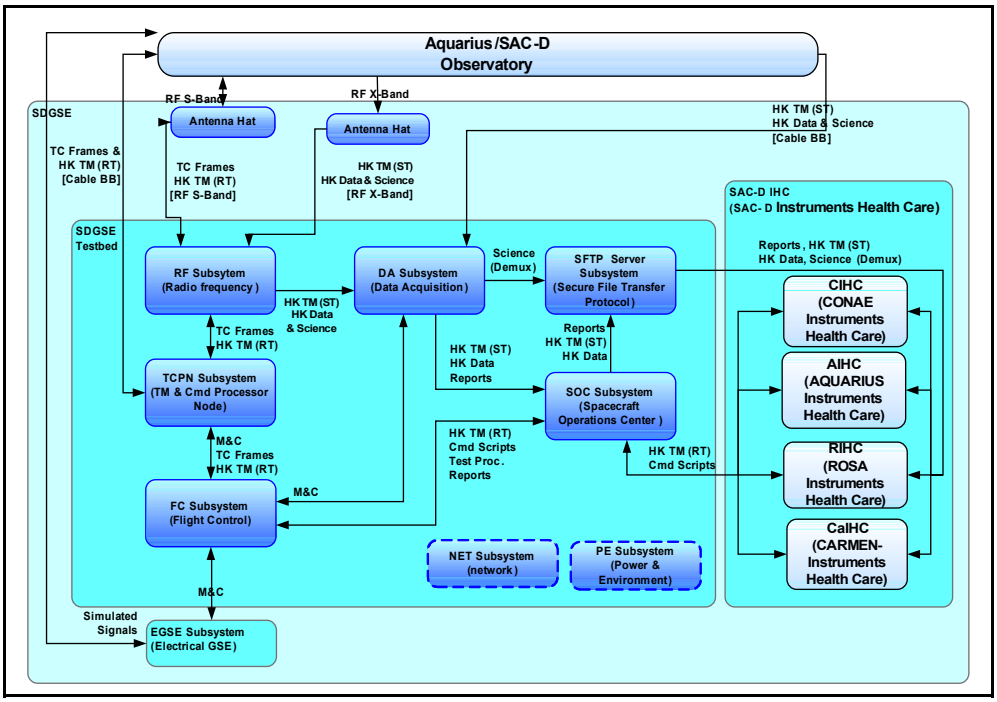

Figure 1-4: GSE design concept

2.0 Interface description

The following sections will be devoted to describe the interfaces between the SDGS and the AQGS.

2.1 I-ACCS-MOC/SOP

Table 2-1 Summarizes the I-ACCS-MOC/SOP interfaces taking into account a classification based on the transported data type and the transport mechanism. For each interface type, the transport links and protocols, the formats, and the MOC and ACCS endpoint systems are specified.

Name	Data Type	Direction	Transport protocols	Formats	MOC endpoint	ACCS endpoint
I-ACCS-MOC/SOP_AR	Action Request	AQGS to MOC	XPNet Encrypted over TCP/IP	XML	AR Manager	SchClt (Scheduler Client)
I-ACCS-MOC/SOP_RPT	Action Reports	MOC to AQGS	XPNet Encrypted over TCP/IP	XML	AR Manager	SchClt (Scheduler Client)
I-ACCS-MOC/ SOP_VOICE	Voice	bidirectional	PSTN	-	Voice Terminal	Voice Terminal
I-ACCS-MOC/SOP_MAIL	Operation Messages	bidirectional	SMTP	Text plain	E-mail Address	E-mail Address

Table 2-1

2.1.1 Action Requests timeline

Action Requests are sets of Actions (commands and their variable data bindings) together with the overall Start Time and End Time estimations; and with scheduling information on their execution order and desired execution time intervals. As a set of actions, Action Requests do not have a particular execution time, but several execution times of the commands that integrate it. Nevertheless, Action Requests have an earliest start time and a latest start time. The Plan that the SOP manages is an overall plan of all the spacecraft activities. Taking this plan into account, the Pass Plans (the particular scripts for each pass) are generated.
The Action Requests life can be divided in several phases.

- **Feasibility Analysis**: After an AR is constructed and sent, a feasibility analysis is performed at the SOP that evaluates the possibility of including the AR in the plan. It is a rough analysis and a positive answer of this analysis does not imply that the AR will be included in the plan, but that it is going to be considered for inclusion.

- **Acceptance**: No later than 7 days before the scheduled AR earlier start time, the MOC tests the AR for inclusion on the Plan. A positive answer to this test implies that the AR shall be included in some Pass Plan.

- **Pass Plan Generation**: After the Acceptance, the passes where the commands are going to be uploaded are fixed including both Time Tagged and Real Time commands corresponding to the Action Requests. It means that not only the times of execution of the commands are set, but also the corresponding passes when they will be sent to the satellite. At least one day before the corresponding pass, the MOC defines and arranges the final Pass Plan, that is to say, it generates the pass plan (i.e., the SCL script for the pass).

- **Pass Plan Execution:** During the planned Ground Station Contacts, the pass plans are executed. Specific previously designed procedures are followed during the satellite contact, especially in the case of contingency. Nevertheless, only the MOC intervenes during the execution of the pass plan. If the uplink of the time tagged commands corresponding to an AR fails, whenever possible, the MOC will attempt to re-upload the commands in a later pass, previous to the execution time tags. For this, it is not necessary that the Aquarius Ground System re-submits the AR.

- **Pass Plan Post Execution**: One hour after the execution of the Pass Plan, a Pass Plan Execution Report on the current execution status of the plan is generated.

Figure 2-5summarizes the previous description.

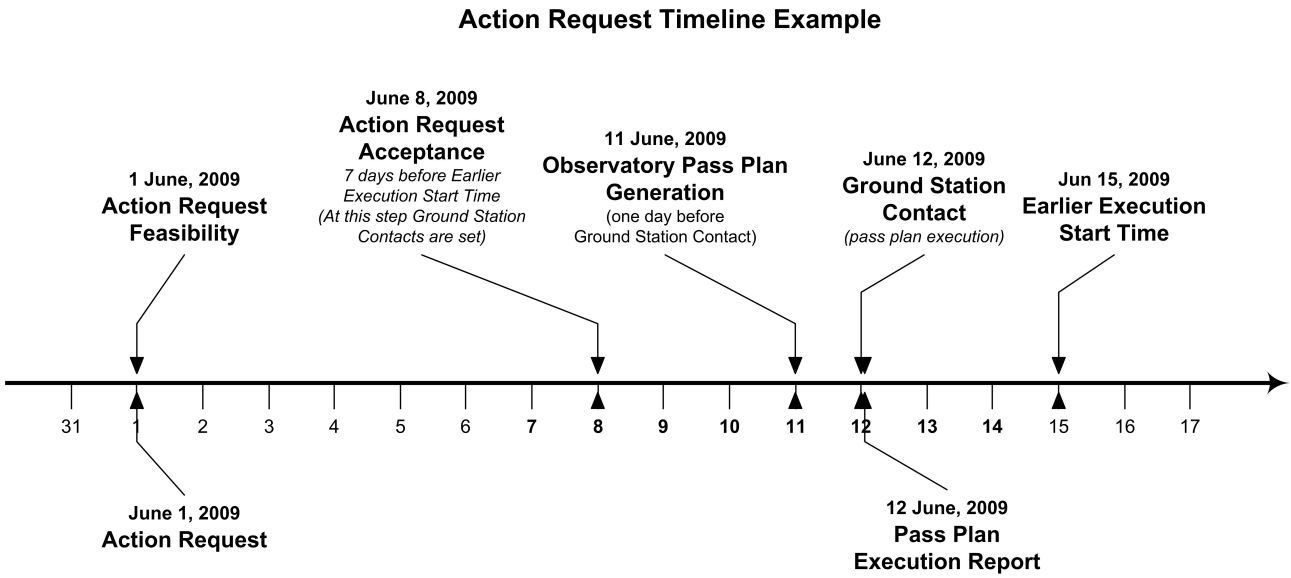

Figure 2-5

2.1.2 Action Requests and Reports interface (ACCS-SOP_AR)

Action Requests are generated at the ACCS by means of the **Scheduler Client** application. This application is a GUI that allows the user to generate an Action Request, to check its consistency and to send it to the SOP via TCP/IP+HTTPS transport protocol.

The AR format is embedded in the Scheduler Client application and is a XML message containing all the information related to the AR's: the SCL basic commands, their

parameters, the desired times of execution, preconditions for the execution about the state of the satellite, etc.

The Scheduler Client at ACCS may only generate and test Aquarius instrument Action Requests. The MOC is responsible for integrating and validating into a Plan, the ARs coming from the S/C and all the Instruments. The MOC is also responsible for generating the Pass Plan from the Plan.

The ACCS-SOP_AR interface supports, among others, the following AQGS to SDGS requests.

- Sending a specific set of commands to the Aquarius instrument.
- Request for an Aquarius instrument Cold-Sky calibration.

The Scheduler Client application allows the user to define Action Requests that can be later sent to the SOC.

The next table shows the three types of Actions that can be integrated into an Action Request.

Action	Description
Commanded Action	This type of action corresponds to the execution of a particular set of commands in a specific order. The used commands have to belong to the SCL Basic Command Library.
Software Patch Upload Action	This type of action corresponds to the uploading of a large set of Real Time commands to perform an upgrade of the onboard software.
Wide System Action	This type of action corresponds to actions that need only platform commands to be performed, including the Cold Sky Calibration.

Table 2-2: Action Classification

The Scheduler Client application allows the user to send Action Requests to the SOP. The Action Requests are sent to the SOP by the TCP/IP+HTTPS transport protocol, SOP receives them, immediately runs a Feasibility Analysis and sends a reply (Feasible or Not Feasible) back to the Scheduler Client, together with an Action Request ID (AR_SD_AQ_YYYYMMDDD_NNN). The SOP's reply type "Feasible" implies that it might be possible to satisfy the AR.

In the Acceptance Phase, the MOC tests the AR for inclusion in the Plan. In this case SOP generates an **Acceptance Report**, Accepted or Not Accepted. Either way, the Report contains relevant data about the acceptance status (e.g., more time constraints on the commands product of planning considerations). The Scheduler Client can query this report via its GUI.

In the Pass Plan Generation Phase, the MOC defines the (to be uploaded) Pass Plan. SOP issues a **Pass Plan Generation Report** (with the message: Pass Plan Generated) containing the assigned Pass Plan ID (PP_SD_YYYYMMDDDNN) and the Pass Plan script source code. The Scheduler Client can query this report via its GUI.

After the execution of the Pass Plan, a **Pass Plan Execution Report** is generated. This report contains information about the successful uploading of the commands during the pass. The Scheduler Client can query this report via its GUI.

As already said, during the planning process, several Reports are generated. Each report is generated when the actions go from one status to another in the whole process of their execution. The next table shows a description of their contents.

Report	Content Description
Feasibility Report	When an AR is received in SOP a feasibility analysis is performed. It evaluates the possibility of including the AR in the plan. The result can be Feasible or Not Feasible. "Feasible" implies that it might be possible to satisfy the AR.
Acceptance Report	It is reported whether or not the Action Request has been accepted for execution. Depending on the case, it also provides an explanation about why an AR has not been accepted, or under what conditions it has been accepted.
Pass Plan Generation Report	When a set of commands are added to a pass plan at the SOP, this inclusion is reported to the payload that initiated the relevant AR.
Pass Plan Execution Report	It reports about the effective upload of the commands during a pass. It means that the commands have been successfully sent to the satellite during a pass.

Table 2-3: Reports and their Contents.

The Action Requests and Reports are handled by the SOP subsystem. The implementation of this system (and all its units) is developed in two steps.

The first includes the implementation of prototype versions of the units which functionalities cover the indispensable and most important aspects of the planning process. It is important to highlight that this first system fulfills all the mission requirements.

The second system includes features that allow a more flexible representation of the Action Request and a more rich representation of the planning domain, increasing the quality and the flexibility of the generated plans.

There are several reasons for this stepwise development of the system.
The first system will be more robust because of its simplicity, decreasing the risk involved in the new development. It allows proving the interfaces are working well and that the direction of development is correct.

Regarding the interfaces, only two aspects change between them. For the first version:

1. *Action Request specification is less flexible.*

   Action Request are reduced to lists of commands with their SCL parameters, and the time tags for the time tagged commands and the selected pass for real time commands (although the policy will be try to avoid real time commands for payload commanding, for actions that require a large amount of commands, there is no other option but to upload during a pass).

2. *The only report that will be generated is the Action Acceptance Report.*

   The report indicates if the action was accepted for inclusion in the plan, but no feasibility analysis or execution report is generated. In the case of operating with this version, any contingency during command uploading (e.g., because of a failure during the pass) would be communicated by e-mail or voice, depending on the gravity of the contingency.

2.1.3 E-mail Interface (I-ACCS-MOC/SOP_MAIL)

The following Operation Messages are generated by the MOC for the ACCS and sent through the I-ACCS-MOC/SOP_MAIL:

Email Subject	Description
OM_AQ_SchedColdSky	Notification of UTC date and time for pending Cold-Sky calibration maneuvers.
OM_AQ_SchedOM	Notification of UTC date and time for pending orbit adjust maneuvers.

Table 2-3: Operations Messages.

Formats of all reports are plain text.

The MOC email address for Operation Messages is: sacd.operations@conae.gov.ar
The ACCS email address for Operation Messages is: accs@seawifs.gsfc.nasa.gov

2.2 I-ACCS-MOC/SOC

Table 2-4 summarizes the ACCS-MOC/SOC interfaces taking into account a classification based on the transported data type and the transport mechanism. For each interface type, the transport links and protocols, the formats, and the MOC and ACCS endpoint systems are specified.

Name	Data Type	Direction	Transport protocols	Formats	MOC endpoint	ACCS Endpoint
I-ACCS-MOC/ SOC_VOICE	Off Standard Issues	bidirectional	PSTN	-	Voice Terminal	Voice Terminal
I-ACCS-MOC/ SOC_MAIL	Off Standard Issues	bidirectional	SMTP	Plain Text	E-mail Address	E-mail Address

Table 2-4: Interfaces between MOC and ACCS

2.2.1 Off Standard Issues, e-mail interface (ACCS-SOC_EMAIL)

The following issues will require utilizing the ACCS-SOC_EMAIL interface, MOC to ACCS:

Email Subject	Description
OSI_AQ_Anomaly	Notification of any Observatory or ASGS anomaly or planned downtime.
OSI_AQ_SoftUpdate	Notification of updates on Scheduler Client or Observatory TSL scripts
OSI_AQ_DocUpdate	Notification of updates on joint documents

Table 2-5: Off-Standard Issues from MOC to ACCS.

The following Notifications will require utilizing the ACCS-SOC_EMAIL interface, ACCS to MOC:

Email Subject	Description
OSI_AQ_SR	Notification of special requests by the Science Team such as, calibrations, changes to instrument operations, responses to anomalous conditions, submission of updates of command or telemetry scripts, etc.
OSI_AQ_DocUpdate	Notification of updates on joint documents

Table 2-6: Off-Standard Issues from MOC to ACCS.

The MOC email address for Off-Standard Issues is: sacd.operations@conae.gov.ar
The ACCS email address for Off-Standard Issues is: accs@seawifs.gsfc.nasa.gov

2.2.2 Off Standard Issues, phone interface (I-ACCS-MOC/SOC_VOICE)

In the event that the party receiving an ACCS-SOC_EMAIL notification does not respond within 24 hours, or response is not expected in that timeframe due to weekend or holiday time off, notifications are to be made via ACCS-SOC_VOICE.

The MOC phone number for Off-Standard Issues is: +54.3547.431020
The ACCS phone number for Off-Standard Issues is: 001.301.286.4553

2.3 I-ADPS-CUSS/ACD

These interfaces represent the communication between the Aquarius Data Processor System and the CUSS. This communication channel is intended to retrieve the **Aquarius science** files downloaded through the X-Band transmitters from the Observatory and SAC-D MOC products and reports. Other data available are **MWR data** and **Observatory housekeeping telemetry** needed for science data processing and Aquarius instrument monitoring.

The Aquarius Data Processing System (ADPS) retrieves all **Data Files** via secure FTP from the CUSS System. The complete file set will include all science, Observatory housekeeping telemetry, and MWR data files.

The ADPS automatically queries the CUSS, for its most recent files according to filename. Filenames are generated automatically by the CUSS and include the UTC reception time to support ADPS retrieval of most recent files. The ADPS queries the CUSS for new files approximately once per minute

Table 2-7 summarizes the ADPS-CUSS interfaces taking into account a **classification** based on the transported **data type** and the **transport mechanism**. For each interface type, the transport links and protocols, the formats, and the CUSS and ADPS endpoint systems are specified.

Interface ID	Data type	Direction	Transp. protocol	Format	CUSS endpoint	ADPS endpoint
I-ADPS-CUSS_AQ	AQ Science	ADPS pulls data from CUSS	TCP/IP	Compressed Binary	SFTP server	SFTP client
I-ADPS-CUSS_TMST	HK TM (ST)	ADPS pulls data from CUSS	TCP/IP	Compressed Binary	SFTP server	SFTP client
I-ADPS-CUSS_TMRT	HK TM (RT)	ADPS pulls data from CUSS	TCP/IP	Compressed Binary	SFTP server	SFTP client
I-ADPS-CUSS_MWR	MWR data files	ADPS pulls data from CUSS	TCP/IP	Compressed Binary	SFTP server	SFTP client
I-ADPS-CUSS_MOCPROD	SAC-D MOC products	ADPS pulls data from CUSS	TCP/IP	Compressed xml files	SFTP server	SFTP client

Table 2-7: Interfaces between CUSS and ADPS

2.3.1 Data files retrieval interface

The ADPS SFTP client will connect to the CUSS SFTP server periodically (once per minute TBC) in order to retrieve data files from the CUSS server.

The CUSS SFTP server will reside in the following IP address: cuss.conae.gov.ar

2.3.2 Published Data Files

The CONAE User Segment Services publishes the following Data Files for the Aquarius GS.

- AQ Science data
  - Raw Aquarius Science data dump from the Observatory.
- HK TM (ST)
  - Stored HKTM file.
- HK TM (RT)
  - Real Time HKTM file.
- Ancillary data
  - MWR processed Science Data.
- SAC-D MOC products and reports
  - SACD Maneuver Report
  - SACD Time-Tagged Buffer Uploaded Report
  - SACD Time-Tagged Buffer Planning-Time Before Pass Report
  - SACD Time-Tagged Buffer Planning-Time After Pass Report
  - SACD CDH Operational Parameters Report
  - SACD PCE Operational Parameters Report
  - SACD MM Operational Parameters Report

2.3.3 Location and Naming Convention

Data Files will be available at the CUSS under different directories according to their contents. The file names include UTC time stamp.
The data files will be packed in compressed (gzip) files.
The naming convention for relevant Aquarius data files is listed in Table 2-8.

Data File ID	Data type	Location	Naming Convention
I-ADPS-CUSS_AQ	AQ Science	RawAQ\	**For Matera passes** IMT_YYYYMMDD_HHMMSS_SACD_RawAQ.bin compressed in IMT_YYYYMMDD_HHMMSS_SACD_RawAQ.bin.gz **For CGSS passes** CGSS_YYYYMMDD_HHMMSS_SACD_RawAQ.bin compressed in CGSS_YYYYMMDD_HHMMSS_SACD_RawAQ.bin.gz
I-ADPS-CUSS_TMST	HK TM (ST)	HKTMST\	For Matera passes IMT_YYYYMMDD_HHMMSS_SACD_HKTMST.bin compressed in IMT_YYYYMMDD_HHMMSS_SACD_HKTMST.bin.gz For CGSS passes CGSS_YYYYMMDD_HHMMSS_SACD_HKTMST.bin compressed in CGSS_YYYYMMDD_HHMMSS_SACD_HKTMST.bin.gz
I-ADPS-CUSS_TMRT	HK TM (RT)	HKTMRT\	SDMOC_YYYYMMDD_HHMMSS_SACD_HKTMRT.bin compressed in SDMOC_YYYYMMDD_HHMMSS_SACD_HKTMRT.bin.gz
I-ADPS-CUSS_MWR	MWR Level 1 Data	TBD	TBD
I-ADPS-CUSS_MOCPROD	SACD Maneuver Report	MANVRRP	SDMOC_YYYYMMDD_HHMMSS_SACD_MANVRRP.xml compressed in SDMOC_YYYYMMDD_HHMMSS_SACD_MANVRRP.xml.gz
	SACD Time-Tagged Buffer Uploaded	TTBUPLD	SDMOC_YYYYMMDD_HHMMSS_SACD_TTBUPLD.xml compressed in SDMOC_YYYYMMDD_HHMMSS_SACD_TTBUPLD.xml.gz

	Report		
	SACD Time-Tagged Buffer Planning-Time Before Pass Report	TTBPTBFR	SDMOC_YYYYMMDD_HHMMSS_SACD_TTBPTBFR.xml compressed in SDMOC_YYYYMMDD_HHMMSS_SACD_TTBPTBFR.xml.gz
	SACD Time-Tagged Buffer Planning-Time After Pass Report	TTBPTAFT	SDMOC_YYYYMMDD_HHMMSS_SACD_TTBPTAFT.xml compressed in SDMOC_YYYYMMDD_HHMMSS_SACD_TTBPTAFT.xml.gz
	SACD CDH Operational Parameters Report	CDHOPPAR	SDMOC_YYYYMMDD_HHMMSS_SACD_CDHOPPAR.xml compressed in SDMOC_YYYYMMDD_HHMMSS_SACD_CDHOPPAR.xml.gz
	SACD PCE Operational Parameters Report	PCEOPPAR	SDMOC_YYYYMMDD_HHMMSS_SACD_PCEOPPAR.xml compressed in SDMOC_YYYYMMDD_HHMMSS_SACD_PCEOPPAR.xml.gz
	SACD MM Operational Parameters Report	MMOPPAR	SDMOC_YYYYMMDD_HHMMSS_SACD_MMOPPAR.xml compressed in SDMOC_YYYYMMDD_HHMMSS_SACD_MMOPPAR.xml.gz

Table 2-8: Naming convention for Aquarius Data Files

Generation frequency, availability (wait time after raw data collection) and access schedules (time span during which the file is online) for the Data Files are listed in Table 2-9.

Data File ID	Generation Frequency	Availability[1]	Access Schedule [weeks]
I-ADPS-CUSS_AQ	After an X-Band Memory dump	15min	4
I-ADPS-CUSS_TMST	After an X-Band Memory dump	15min	4
I-ADPS-CUSS_TMRT	After an S-Band contact	15min	4
I-ADPS-CUSS_MWR	After an X-Band Memory dump	72	4

Table 2-9: Availability of Data Files.

2.3.3.1 MWR Level 1 Ancillary Data packed file contents

The contents of this folder are TBD.

[1] Applicable only for products generated from x-and downlink at ETC

2.3.3.2 SAC-D MOC products and reports format

SAC-D MOC products format is specified in [1.4].

2.4 I-ADPS-CODS/DI

Interface ID	Data type	Direction	Transport links & protocols	Format	CODS endpoint	ADPS endpoint
I-ADPS-CODS/DI_ODP	Orbit Dynamics Products	CODS/DI to FGSS	Digital line +TCP/IP	GZIP Compressed File	SFTP server	SFTP client

2.4.1 Orbit Dynamics Products List

The Orbit Dynamics Products are generated on a daily basis at 13:00 UTC. Each product is compressed and made available for retrieval at a directory specific for each product that contains all the files generated for that product during the mission life. Generated files will be available for one year after generation. Ephemeris products will start to be provided after onboard GPS commissioning.
A directory “latest” contains the last version generated of each product.
Table 2-10 shows the list of Orbit Products to be published by the I-ADPS-CODS/DI interface.

Description	File Name and Location
Two Line Element	Product file name: CODS_YYYYMMDD_HHMMSS_SACD_TLE.TLE Compressed file name: CODS_YYYYMMDD_HHMMSS_SACD_TLE.TLE.gz Location: TLE/
Predicted Ephemeris TOD Cartesian	Product file name: CODS_YYYYMMDD_HHMMSS_SACD_PREDEPHEM_TOD_XYZ_#1.TXT Compressed file name: CODS_YYYYMMDD_HHMMSS_SACD_PREDEPHEM_TOD_XYZ_#1.TXT.gz Location: PREDEPHEM_TOD_XYZ/
Predicted Ephemeris	Product file name:

Geodetic	CODS_YYYYMMDD_HHMMSS_SACD_PREDEPHEM_GEOD_LLH_#1.TXT Compressed file name: CODS_YYYYMMDD_HHMMSS_SACD_PREDEPHEM_GEOD_LLH_#1.TXT.gz Location: PREDEPHEM_GEOD_LLH/
Predicted Ephemeris MJ2K Cartesian	Product file name: CODS_YYYYMMDD_HHMMSS_SACD_PREDEPHEM_MJ2K_XYZ_#1.TXT Compressed file name: CODS_YYYYMMDD_HHMMSS_SACD_PREDEPHEM_MJ2K_XYZ_#1.TXT.gz Location: PREDEPHEM_MJ2K_XYZ/
Orbit Ephemeris TOD Cartesian	Product file name: CODS_YYYYMMDD_HHMMSS_SACD_ORBEPHEM_TOD_XYZ_#1.TXT Compressed file name: CODS_YYYYMMDD_HHMMSS_SACD_ORBEPHEM_TOD_XYZ_#1.TXT.gz Location: ORBEPHEM_TOD_XYZ/
Orbit Ephemeris Geodetic	Product file name: CODS_YYYYMMDD_HHMMSS_SACD_ORBEPHEM_GEOD_LLH_#1.TXT Compressed file name: CODS_YYYYMMDD_HHMMSS_SACD_ORBEPHEM_GEOD_LLH_#1.TXT.gz Location: ORBEPHEM_GEOD_LLH/
Orbit Ephemeris MJ2K Cartesian	Product file name: CODS_YYYYMMDD_HHMMSS_SACD_ORBEPHEM_MJ2K_XYZ_#1.TXT Compressed file name: CODS_YYYYMMDD_HHMMSS_SACD_ORBEPHEM_MJ2K_XYZ_#1.TXT.gz Location: ORBEPHEM_MJ2K_XYZ/
Ground Station Contacts	Product file name: CODS_YYYYMMDD_HHMMSS_SACD_GSCONTACTS_#2.TXT Compressed file name: CODS_YYYYMMDD_HHMMSS_SACD_GSCONTACTS_#2.TXT.gz Location: GSCONTACTS/
South Atlantic Anomaly Passes	Product file name: CODS_YYYYMMDD_HHMMSS_SACD_SAA.TXT

	Compressed file name: CODS_YYYYMMDD_HHMMSS_SACD_SAA.TXT.gz Location: SAA/
Eclipses	Product file name: CODS_YYYYMMDD_HHMMSS_SACD_ECL.TXT Compressed file name: CODS_YYYYMMDD_HHMMSS_SACD_ECL.TXT.gz Location: ECL/
Events (Contacts, Eclipses and SAA)	Product file name: CODS_YYYYMMDD_HHMMSS_SACD_EVENTS.TXT Compressed file name: CODS_YYYYMMDD_HHMMSS_SACD_EVENTS.TXT.gz Location: EVENTS/
Maneuvers List	Product file name: CODS_YYYYMMDD_HHMMSS_SACD_MANLIST.TXT Compressed file name: CODS_YYYYMMDD_HHMMSS_SACD_MANLIST.TXT.gz Location: MANLIST/
AOCS quaternions (post processed)	Product file name: CODS_YYYYMMDD_HHMMSS_SACD_Q.TXT Compressed file name: CODS_YYYYMMDD_HHMMSS_SACD_Q.TXT.gz Location: Q/

Table 2-10: Orbits Products Detail.

Where #1 and #2 are variables which stand for:
#1: O: operational orbit, D: definitive orbit
#2: Ground Station ID with following possible values:
- ETC: Córdoba Ground Station
- IML: Malindi Ground Station
- IMT: Matera Ground Station
- NEN: NASA NEN
- NET: the whole ground network

The formats of these files are described in Section 6 of this document. EVENTS, GSCONTACTS, SAA y Eclipses will contain 5 weeks of predicted data.

2.5 I-NEN-MOC/FC

This is the interface between the MOC's FC subsystem and the NEN. The telemetry (RT) from the spacecraft and the telecommands to is the most important data exchanged through this interface. This interface also encloses the Sweep Request, and voice communication with the FGSS. Table 2-11 shows the interface that we will describe.

Table 2-11 summarizes the MOC/FC-NEN interfaces taking into account a **classification** based on the transported **data type** and the **transport mechanism**. For each interface type, the transport links and protocols, the formats, and the MOC and NGN endpoints systems are specified.

Interface ID	Data type	Direction	Transport links & protocols	Format	MOC endpoint	NGN endpoint
I-MOC/FC-NEN_TM	HK TM (RT)	NEN to MOC	TCP/IP	SMEX	/PTP bridge	NEN/PTP
I-MOC/FC-NEN_TC	TC	MOC to NEN	TCP/IP	EOS	PTP bridge	NEN/PTP
I-MOC/FC-NEN_VOICE	Voice	Bidirectional	Dedicated link	voice	Voice Terminal	Voice Terminal

Table 2-11

2.5.1 Telemetry and Telecommand interfaces (I-MOC/FC-NEN_TM, I-MOC/FC-NEN_TC)

The interface between the FCs of the MOC and the NEN is realized by the connection between two systems: the PTP (Programmable Telemetry Processor) and the PTP Bridge. The PTP is part of the NEN that is visible to the MOC and it connects (as a client application) to the PTP Bridge (a Server Process) that is listening on a defined set of ports.

The full specification of the formats involved is described in section 5 of this document.

2.5.2 Voice interface (I-MOC/FC-NEN_VOICE)

Voice terminals are installed both at FC and NEN, to provide a communication link between the FC operators and the NEN operators.

Channels Cordoba-1 and Cordoba-2 are available for SAC-D.

2.6 I-MOC/SOP-NEN

The MOC/SOP-NEN interface comprises the exchange of Ground Station Scheduling messages. This interface is the same that is described in section 3.

2.7 I-CODS/DI-FDF

These are the interfaces between the NASA Flight Dynamics Facility and the CONAE Orbit Dynamics Service which is active from launch through Commissioning Phase. Interfaces are listed below and data exchanged through each interface and availability is listed in Table 2-12

Interfaces protocols and endpoints are listed below.

Interface ID	Data type	Direction	Transport links & protocols	Format	CODS endpoint	FDF endpoint
I-CODS/DI-FDF_SFTP	Commissioning Orbit Dynamics Products	FDF to CODS/DI	TCP/IP	Compressed Plain Text	SFTP client	SFTP server
I-CODS/DI-FDF_EMAIL_OD	Commissioning Orbit Dynamics Products	FDF to CODS/DI	email	Compressed Plain Text		
I-CODS/DI-FDF_FAX	Commissioning Orbit Dynamics Products	FDF to CODS/DI	PSTN	-	FAX terminal	FAX terminal
I-CODS/DI-FDF_VOICE	Actual Launch Time	FDF to CODS/DI	PSTN		Voice Terminal	Voice Terminal
I-CODS/DI-FDF_EMAIL_LTIME	Actual Launch Time	FDF to CODS/DI	email			

Data exchanged through each interface is listed below. In this list, “L” stands for “Launch time“ and S” stands for “Separation time”.

	I-CODS/DI-FDF_SFTP	I-CODS/DI-FDF_EMAIL_OD	I-CODS/DI-FDF_FAX	I-CODS/DI-FDF_VOICE	I-CODS/DI-FDF_EMAIL_LTIME	Availability
Actual Launch Time				X	X	L+15min
Separation State Vector	X	X	X			S+30min
Separation TLE	X	X	X			S+30min
S+3h State Vector	X	X	X			S+3hs
S+3h TLE	X	X				S+3hs
S+5h State Vector	X	X	X			S+5hs
S+5h Two Line Element	X	X				S+5hs
Daily State Vector	X	X				Daily at 15UTC
Daily Two Line Element	X	X				Daily at 15UTC
Daily Ephemeris (UTC, inertial TOD)	X	X				Daily at 15UTC

Table 2-12: Data exchange FDF-CODS

2.7.1 Commissioning Orbit Dynamics Products List

The Commissioning Orbit Dynamics Products are to be distributed by SFTP, email or FAX interfaces according to table Table 2-12. Orbit products will be provided by FDF based on angles and coherent Doppler tracking data obtained from stations listed in section 3.6. Any additional NEN station used for tracking must not turn carrier on during Observatory pass and NEN shall take all the actions needed to assure that.

The following list, describes all the products that are distributed by the FDF through this interface. In this table “S” stands for “Separation time”.

Data File ID	Data type	Generation Frequency	Access Schedule [weeks]
SV	Separation State Vector	Once	1
	S+3h State Vector	Once	1
	S+5h State	Once	1

	Vector		
	State Vector	Daily	1
TLE	Separation Two Line Element	Once	1
	S+3h Two Line Element	Once	1
	S+5h Two Line Element	Once	1
	Two Line Element	Daily	1
EPHEM	Ephemeris (UTC, inertial TOD)	Daily	1

Table 2-13: Commissioning Orbit Products Generation Frequency

Orbit products generated at daily frequency will be available at 15:00:00 UTC everyday of commissioning phase.

TLE and EPHEM are predictive on S + 3 hours and S + 5 hours deliveries, and are definitive from L+1 day on.

Table 2-14 shows the naming convention for the Commissioning Orbit Products to be published by the I-CODS/DI-FDF interface.

Description	File Name	Format
FDF State Vector	FDF_YYYYMMDD_HHMMSS_SACD_SV_XYZ_MJ2K_O.txt compressed file name in FDF_YYYYMMDD_HHMMSS_SACD_SV_XYZ_MJ2K_O.txt.gz	section 6.3 MJ2K system of reference UTC time
FDF Two Line Element	FDF_YYYYMMDD_HHMMSS_SACD_TLE.TLE compressed file name in FDF_YYYYMMDD_HHMMSS_SACD_TLE.TLE.gz	section 6.1
FDF Predicted Ephemeris TOD Cartesian	FDF_YYYYMMDD_HHMMSS_SACD_PREDEPHEM_TOD_XYZ_D.TXT compressed file name in FDF_YYYYMMDD_HHMMSS_SACD_PREDEPHEM_TOD_XYZ_D.TXT.gz	section 6.2 TOD system of reference UTC time starts 2 days in the past at 00:00 UTC and spans 7 days from the end of the data arc used in the OD (total span 9 days) and of 60-

		second granularity

Table 2-14: Commissioning Orbits Products Detail.

Where
YYYYMMDD_HHMMSS is the generation time

2.7.2 Commissioning Orbit Dynamics Products, SFTP interface (I-CODS/DI-FDF_SFTP)

Through this interface CODS will retrieve all files listed in Table 2-13 located at FDF SFTP server. CODS will connect with user 'SAC-D' to FDF (FDF provides the server side) . Files will be at folder '\MOC'. Files naming convention is described in Table 2-14. SFTP server will be located at the following URL:
zappa.fdf.nascom.nasa.gov

2.7.3 Commissioning Orbit Dynamics Products, email interface (I-CODS/DI-FDF_EMAIL_OD)

Through this interface CODS will receive all files listed in Table 2 13. Files naming convention is described in Table 2 14.

The FDF email address for these messages are:
jason.t.laing@nasa.gov (main)
douglas.t.ward@nasa.gov (back up)

Additional emails address for FDF contact: fdf_sac-d@listserv.gsfc.nasa.gov

The CODS email address for these messages is: cods.operations@conae.gov.ar

2.7.4 Commissioning Orbit Dynamics Products, fax interface (I-CODS/DI-FDF_FAX)

Through this interface CODS will receive the separation TLE and the first three state vectors: Separation State Vector, S+3h State Vector and S+5h State Vector.

CODS fax number: +54-3547431057

2.7.5 Actual Launch Time, voice interface (I-CODS/DI-FDF_VOICE)

This interface is used to notify exact launch time together with email interface. The voice notification shall be as in Table 2-15

ID	Description
CODS_ALT	Notification of the actual launch time as HH:MM:SS.SSS UTC

Table 2-15: Launch time voice interface from FDF to CODS.

The CODS telephone number for this interface: +54-3547431087
The FDF telephone number for this interface is: 001-3012868191

The call from FDF to CODS to announce actual launch time shall occur before 15 minutes after the actual launch.

2.7.6 Actual Launch Time, email interface (I-CODS/DI-FDF_EMAIL_LTIME)

This interface is used to notify exact launch time together with voice interface.

Email subject
Aquarius/SAC-D actual launch time
Email text
Aquarius/SAC-D Nominal launch time HH:MM:SS.SSS UTC Aquarius/SAC-D Actual launch time is HH:MM:SS.SSS UTC Aquarius/SAC-D Launch shift time is SSS.SSS

Table 2-16: Launch time email message from FDF to CODS.

where Launch shift time is calculated as

Launch shift time = (Actual launch time) – (Nominal launch time)

and the time unit provided is seconds.

The FDF email address for this message are:
jason.t.laing@nasa.gov (main)
douglas.t.ward@nasa.gov (back up)

The CODS email address for this message is: cods.operations@conae.gov.ar

The email delivery from FDF to CODS to announce actual launch time shall occur before 15 minutes after the actual launch.

2.8 I-CODS/DI-NEN

Interface ID	Data type	Direction	Transport links & protocols	Format	CODS endpoint	NEN endpoint
I-CODS/DI-NEN_ODP	Orbit Dynamics Products	CODS/DI to NEN	TCP/IP	text file	SFTP client	SFTP server

2.8.1 Orbit Dynamics Products List

Table 2-17 shows the list of Orbit Products to be published by the I-ADPS-CODS/DI interface.

Description	File Name
Two Line Element	Product file name: CODS_YYYYMMDD_HHMMSS_SACD_TLE.TLE Compressed file name: CODS_YYYYMMDD_HHMMSS_SACD_TLE.TLE.gz Location: in/

Table 2-17: Orbits Products Detail

The format of this file is described in Section 6 of this document.

3.0 NEN to SAC-D MOC Scheduling

3.1 General

This section briefly introduces NASA Near Earth Network (NEN). The Ground Stations involved are: Wallops, Alaska Satellite Facility, Svalbard, and McMurdo.

These ground stations will be used extensively for the launch, early orbits, check-out and commissioning phase of the SAC-D Mission. After the completion of those phases, NEN will be required exclusively for special support (e.g. spacecraft maneuvers) and contingency support.

To ensure connectivity and proficiency, at least one proficiency pass per month will be scheduled between SDMOC and NEN sites. Proficiency passes will be scheduled by NEN Performance Analyst Office without SDMOC request. NEN Performance Analyst Office will schedule a different site for each proficiency pass so that all of the supporting sites maintain proficiency supporting Aquarius/SAC-D mission. Proficiency passes scheduling is handled as NENSO routine schedule additions described in section 3.2.3.

It is assumed that in NEN will be a service called Near Earth Network Scheduling Office that schedules activities and exchanges messages with SDMOC in order to schedule them. The method to exchange the scheduling message will be using a SFTP server. Details about this method can be found in section 3.3. SFTP exchange will be backed up by transferring messages by email which is described in section 3.4.

Figure 3-6 shows the timeline in which the scheduling process works. In this document, the term “week” refers to periods from Monday through Sunday. The nominal scenario works in the following way:

The timeline has 3 named weeks: Planning week (a.k.a. Strawman week), Forecast week, Operations week (a.k.a. Real-time week). Before each of these weeks, the ground station will generate a schedule that will be improved during the following weeks. Let’s describe this process in detail:

At least one day before the Friday before the Planning/Strawman week starts, SDMOC sends a request to the ground station scheduling office in a specific format (detailed in section 3.1.1). The Friday before the Forecast week, during Planning/Strawman week, the Near Earth Network Scheduling Office (NENSO) sends the Forecast schedule that contains activities that are to be performed approximately two weeks in the future; this schedule contains minimal conflicts (e.g. overlapping of passes that required the same ground station equipment). Once SDMOC receives the Forecast schedule, it will be reviewed and if SDMOC does not require any change in the proposed schedule, no further messages will be sent. If SDMOC does not need (or cannot support contact as scheduled) the SDMOC will indicate such in a new u-file that it will send to the GS schedule service and the indicated passes will be deleted. If the SDMOC needs to add additional contacts, the forecast schedule will be confirmed and additional support will be requested as defined in the section 3.2. During Forecast week also NENSO can make changes in the schedule following the message format described in section 3.2.

The Thursday before the Real-Time week begins, NENSO will send an operational schedule that comprises activities that are to be performed during Real-time Operations week; this schedule should have had all conflicts resolved. Once the Real-Time week starts, it is possible to change the schedule according to Section 3.2. It is important to highlight that both NENSO and SDMOC can propose changes in the schedule. NENSO proposes changes with s-files only and SDMOC does it with u-files only, in any moment after the first SDMOC i-file requested schedule before the Planning/Strawman. All u-files generated by SDMOC will contain the last received s-file plus any additional pass that SDMOC requests and less any deletion (i.e.: passes accepted by NENSO that SDMOC decides not to use).

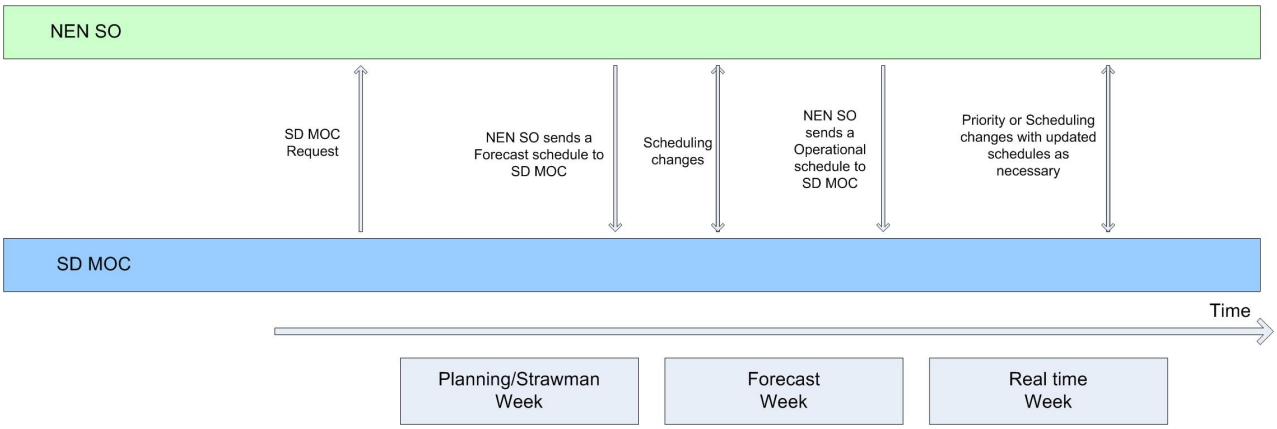

Figure 3-6: Scheduling process timeline

3.1.1 Definitions

3.1.1.1 Planning/Strawman schedule SAC-D MOC request

It is the request sent by SAC-D to the NENSO, this is the initial request or i-file. This message has to be sent with at least 18 days before the Real-time week starts. The information to make a request is described in Table Table 3-18: GN Schedule Request Format “i-file”.

Item No.	Name	Format	Size in (Bytes)	Value(s)
1	Support Activity Tag (SAT)	ASCII	15	Empty for initial Schedule Request File,
2	Spacecraft Designator	ASCII	3	Fixed alphanumeric assigned by WOTIS for each mission. For SAC-D, “SAD” will be used.
3	GN Station Designator	ASCII	3	see acronym column in Table 3-22
4	Beginning of Track (BOT)	GMT Field	13	Station equipment “on” time, “YYYYDOYHHMMSS”
5	End of Track (EOT)	GMT Field	13	Station equipment “off” time “YYYYDOYHHMMSS”
6	Support Activity Code	ASCII	4	One of the following: “TR1” (for telemetry and commanding) “TR2” (for telemetry only)
7	Orbit Number	ASCII	10	Monotonically increasing orbit counter

8	Band Designator	ASCII	2	"S1" = S-Band link.
9	Trailing Spaces	ASCII	Variable	Space characters used to fill out record to a total length of 100characters (WOTIS responses only)

Table 3-18: GN Schedule Request Format "i-file"

To request contacts, SDMOC shall put a "i"Request message" message in SFTP (path: /TONEN/INBOX) the name of this file must follow the convention described in section 3.3.2.

3.1.1.2 Forecast schedule

This forecast schedule, s file, is transmitted by NENSO 10 days before the real-time week and is generated using SDMOC requests or general mission requirements as input.

This message must be in a plain text and the data fields must be delimited by comma. An example of this message can be found in section 7.2.

NENSO shall publish the "Forecast schedule" message in SFTP (path: /TOSDMOC/INBOX) the name of this file must follow the convention describe in section 3.3.2 SDMOC will pickup from this SFTP server the "Forecast schedule" message and move it to path: /TOSDMOC/HISTORY using the same name. In section 7.2 can be found an example of this schedule.

3.1.1.3 Operations Schedule

The Thursday before Operations week, NENSO will transmit an Operational schedule, s file, 3 days before the Real Time Operations week which comprises activities that are to be performed during the following week (Real-time week); this schedule should have had all conflicts resolved.

NENSO shall publish the "Operation schedule" message in SFTP (path: /TOSDMOC/INBOX) the name of this file must follow the convention describe in section 3.3.2.

SDMOC will pickup from this SFTP server the "operation schedule" message and move it to path: /TOSDMOC/HISTORY using the same name.

In Section 7.2 can be found an example of the Operations schedule.

Item No.	Name	Format	Size in (Bytes)	Value(s)
1	Support Activity Tag (SAT)	ASCII	15	ID number assigned by WOTIS
2	Spacecraft Designator	ASCII	3	Fixed alphanumeric assigned by WOTIS for each mission. For SAC-D, "SAD" will be used.
3	GN Station Designator	ASCII	3	see acronym column in Table 3-22
4	Beginning of Track (BOT)	GMT Field	13	Station equipment "on" time, "YYYYDOYHHMMSS"

5	End of Track (EOT)	GMT Field	13	Station equipment "off" time "YYYYDOYHHMMSS"
6	Support Activity Code	ASCII	4	One of the following: "TR1" (for telemetry and commanding) "TR2" (for telemetry only)
7	Orbit Number	ASCII	10	Monotonically increasing orbit counter
8	Band Designator	ASCII	2	"S1" = S-Band link.
9	Trailing Spaces	ASCII	Variable	Space characters used to fill out record to a total length of 100characters (WOTIS responses only)

Table 3-19: GN Schedule Response Format s-file

3.1.1.4 Forecast week

This week is 7 days before the Operations week and is transmitted 10 days before the Real-Time Operations week begins. During this week, SDMOC and NENSO negotiate the schedule. During this week, they can add, delete or change the schedule in order to solve any conflict. To add, delete, accept or deny passes SFTP servers will be used by SDMOC and NENSO, as it is described in Section 3.2.

3.1.1.5 Operations week

The operations week is transmitted 3 days before the week begins on Monday. The schedule is considered confirmed after transmitted. Any changes to the schedule should be necessary to the data capture of health and safety of the spacecraft.

To add, delete, accept or deny passes SFTP servers will be used by SDMOC and NENSO, as is described in Section 3.2.

3.1.1.6 Ground Network Availability (NAM and GNSTAT)

The Near Earth Network Performance Analyst Office (GNPAO) will send a Network Advisory message (NAM) in order to report scheduled downtime with a particular station, in case this involves additions or deletions. The Scheduling office will follow the Network Advisory message with an updated Schedule message. The sites will transmit a GN status message for unscheduled downtime for antenna or equipment problems resulting in the site being unable to support or only able to support on a best effort basis. The Near Earth Network Scheduling Office (NENSO) will follow with an updated Operational Schedule with changes.

NAM and GNSTAT messages are transmitted from the GN Discrepancy System by e-mail.

3.2 Schedule arrangement

During Planning/Strawman and Forecast weeks SDMOC and NENSO can make changes to the schedule. These changes will be broken into three categories:

Routine changes: Any change to the schedule before the real-time week begins
Priority changes: Any change to the schedule that occurs during the real-time week
Real time changes: Any change to the schedule that occurs with the scheduled AOS less than 48 hours in the future.

The following is the description of the messages to do these operations. All these messages must follow the naming convention described in section 3.3.2

3.2.1 SAC-D MOC schedule additions – u-file.

The u-file or updated file reflects additions to the schedule. The u file is a combination of the i-file and the s-file. The schedule file is returned from the SDMOC to NENSO with the WOTIS record id numbers in the file. The adds are submitted in the same manner as the i-file

To request additional contacts, SDMOC shall put a "update message" (section 3.3.2) message in SFTP (path: /TONEN/INBOX) with the following information:

Item No.	Name	Format	Size in (Bytes)	Value(s)
1	Support Activity Tag (SAT)	ASCII	15	ID number assigned by WOTIS Or empty if new request by the SDMOC
2	Spacecraft Designator	ASCII	3	Fixed alphanumeric assigned by WOTIS for each mission. For SAC-D, "SAD" will be used.
3	GN Station Designator	ASCII	3	see acronym column in Table 3-22
4	Beginning of Track (BOT)	GMT Field	13	Station equipment "on" time, "YYYYDOYHHMMSS"
5	End of Track (EOT)	GMT Field	13	Station equipment "off" time "YYYYDOYHHMMSS"
6	Support Activity Code	ASCII	4	One of the following: "TR1" (for telemetry and commanding) "TR2" (for telemetry only)
7	Orbit Number	ASCII	10	Monotonically increasing orbit counter
8	Band Designator	ASCII	2	"S1" = S-Band link.
9	Trailing Spaces	ASCII	Variable	Space characters used to fill out record to a total length of 100characters (WOTIS responses only)

Table 3-20: GN Schedule Response Format s-file

Once NENSO receives a request from the SDMOC, moves the file from (path: /TONEN/INBOX) to (path: /TONEN/HISTORY) and will determine if NENSO can support the new activity and will provide response back to the SDMOC in the s file format, (either a confirmation or denial). The confirmation or denial message must be place into SFTP server (path: /TOSDMOC/INBOX) with the message described in section 3.2.1.1.

3.2.1.1 NENSO messages: confirmation and denial of additions

Confirmation message and denial messages will be in the form of an s-file from NENSO. With this message NENSO confirms the support requested and adds the requests to the schedule. The confirmation message is created by NENSO and put into SFTP server (path /TOSDMOC/INBOX).

Denial message – the denial message would be in the format of an s-file and would not contain the activity requested.

With these messages NENSO denies the support request and will not add this request to the operations schedule.

The confirmation message is created by NENSO and put it into SFTP server (path /TOSDMOC/INBOX). The name of this message must follow the structure described in (section 3.3.2)

3.2.2 SDMOC routine schedule Deletions

SDMOC format for schedule deletions would be in the format of a u-file, with the requested deletion not in the schedule.

In the event that the SDMOC wishes to delete a scheduled contact, must put it into SFTP server (path: /TONEN/INBOX) a message with u-file or s-file format (depending of whether the message also contains additions).

NENSO will put a file into SFTP server (path: /TOSDMOC/INBOX) confirming the deletion as explained before.

3.2.3 NENSO routine schedule additions

NENSO will use a s file format for schedule adds and a free text message with the below information included. Messages are e-mail. In most cases the NENSO will not be requesting scheduling additions. If NENSO requests an addition by e-mail, if accepted SDMOC will generate a u-file including this addition and the process will continue as explained before.

The two most likely cases are when a specific request is not available and NENSO provides an alternate support or when NENSO proposes SDMOC a support that was previously rejected by NENSO but is currently possible to support it. The message will be in u-file format.

3.2.4 NENSO routine schedule deletions

In the event that the GS NENSO has to delete a scheduled contact, NENSO will put a s-file into SFTP server (path: /TOSDMOC/INBOX). Deletions within a 48 hour period will be verbal notification with an updated s-schedule following the verbal.

SDMOC will confirm the receipt of the deletion notification by means of moving the s-file from /TOSDMOC/INBOX to /TOSDMOC/HISTORY. Unless SDMOC explicitly states the

existence of a conflict in the new schedule with a new s-file or u-file, NENSO can assume SDMOC accepts all proposed deletions.

3.3 Files Main Exchange Method

As we said before the method to exchange the messages is through SFTP servers. This section describes the file structure of these servers. There are two SFTP servers to be used, one is located in the SDMOC network and the other is located in NENSO network. TONEN folder is located at NENSO server and it is where SDMOC generated messages are inputted. TOSDMOC folder is located at SDMOC server and it is where NEN generated messages are inputted.

3.3.1 File Structure

The following file structure will be use by the SFTP servers.

Directories	Description	Comments
TONEN\INBOX	It Contains the message that SDMOC sends to NEN: Request message, Add message, delete message, confirmation message and denial message.	Once NEN reads a message from this directory must move the message to TONEN\HISTORY folder
TONEN\HISTORY	It Contains all the messages that SDMOC sent to NEN.	The messages in this folder must never be deleted.
TOSACD\INBOX	It Contains the message that NEN sends to SDMOC: Request message, Add message, delete message, confirmation message and denial message.	Once SD reads a message from this directory must move the message to TONEN\HISTORY folder
TOSACD\HISTORY	It Contains all the messages that NEN sent to SDMOC.	The messages in this folder must never be deleted.

Table 3-21: File structure

3.3.2 File Naming Convention

The file naming that must be used by SDMOC and NENSO to exchange messages is the following:

xsadbYYYYDOYd07.iD

where

x is i, u or s depending on the type of message
YYYY = year number
DOY = day of year
iD = unique identifier for a message. It is unique among messages for a day

Examples for a schedule file would be:
ssadb2011010d07.623543
ssadb2011017d07.d916789

3.4 Files Back up Exchange Method

In case the destination server for scheduling message is not running or is not reachable, the transfer shall be executed by email.

The destination email address to deliver messages to NEN scheduling office is: wsg-wsg@ncc-comm.gsfc.nasa.gov
Messages delivered to this email address will be sent from SAC-D MOC email address sacd.operations@conae.gov.ar

The destination email address to deliver messages to SAC-D MOC is: sacd.operations@conae.gov.ar
Messages delivered to this email address will be sent from NEN scheduling office email address wsg-wsg@ncc-comm.gsfc.nasa.gov

3.5 Scheduling by phone

In case emergency contacts are needed or to reduce negotiation time, phone connectivity is available. Phone agreement does not replace interface on SFTP or email exchanges, just reduces the negotiation time.

NENSO Phone numbers for scheduling negotiation are:
001-575-527-7195 Mike Ostic
001-575-527-7130 Kathy
001-575-527-7030 Philippa
001-575-527-7195 Alexis

SAC-D MOC phone number for scheduling coordination is:
+54-3547-431020

3.6 NEN stations for Aquarius/SAC-D

Station/antenna	Scheduling Acronym	Latitude (deg)	Longitude (deg)	Height (m)
Fairbanks, Alaska	ASF	64.8588	212.1418	205
Svalbard, Norway Station SG1	SGS	78.2307	15.3897	497
McMurdo, Antarctica 10 meters antenna	MGS	-77.8391	166.6671	153
Wallops Island 11 meters antenna	WPS	37.9249	284.5234	-20
Svalbard, Norway Station SG2 11 meters antenna	SKS	78.2303	15.3928	455

Table 3-22: NEN stations scheduling acronyms

4.0 Interfaces during the launch campaign

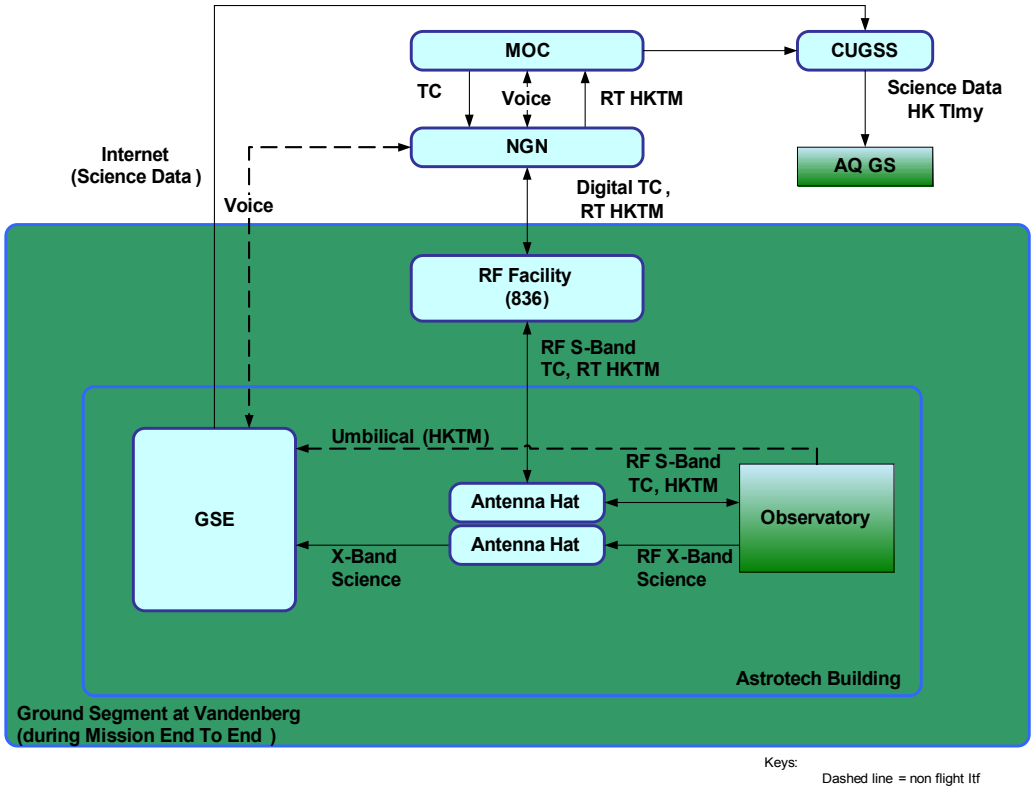

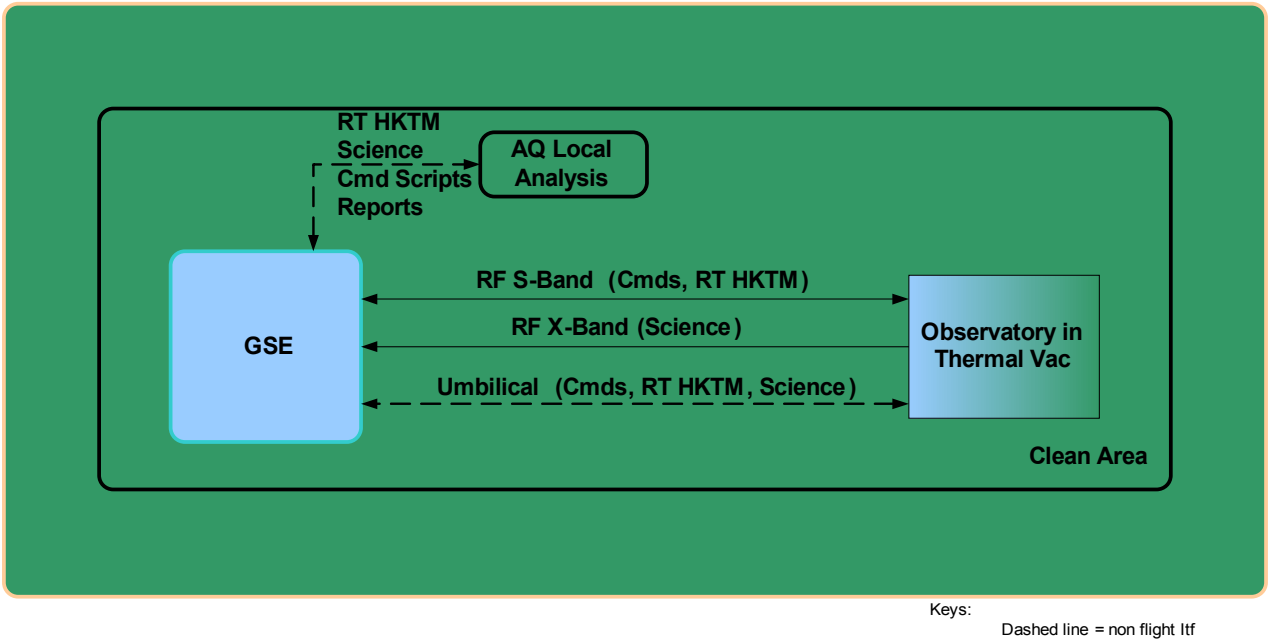

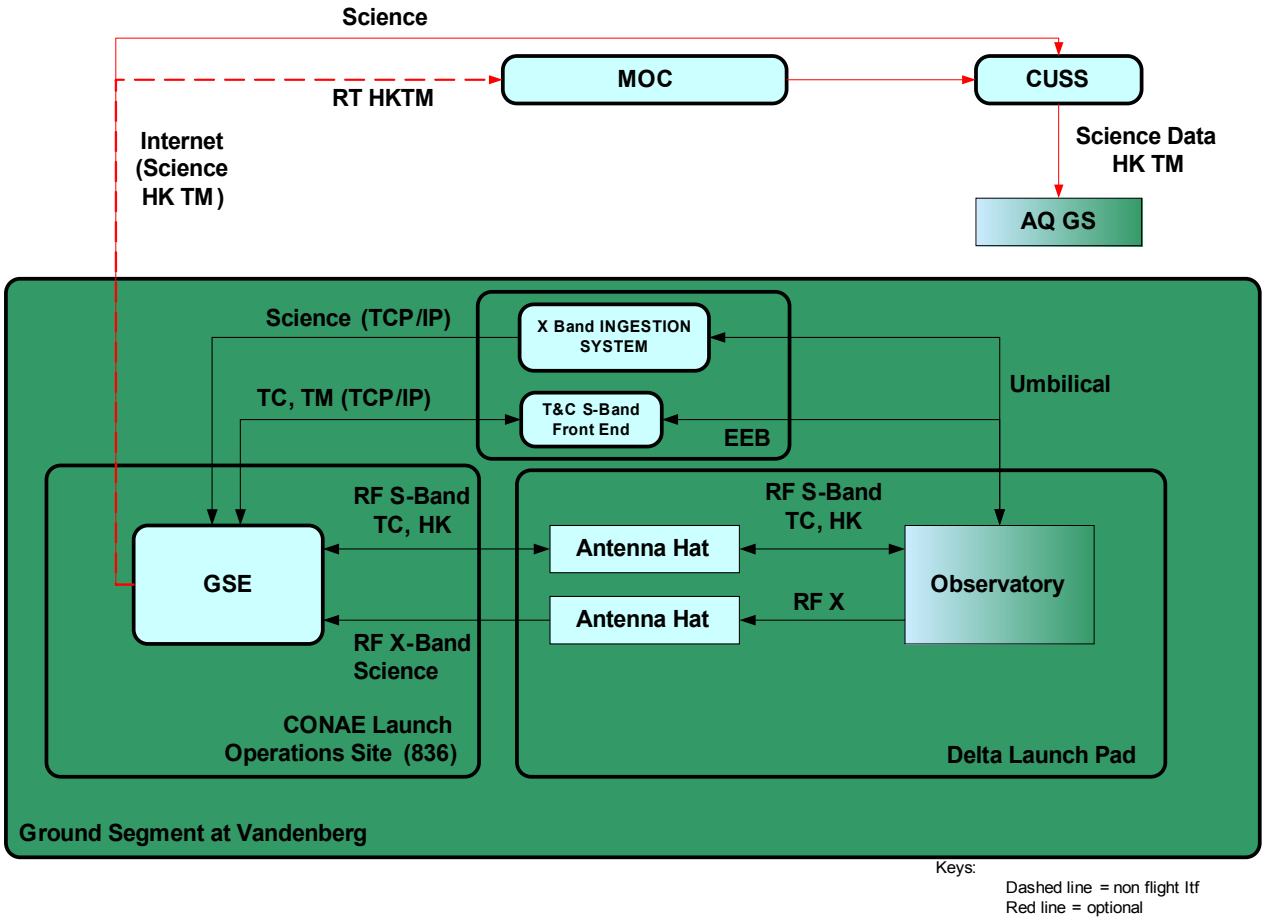

4.1 I-AQGS-GSETB

The interfaces between AQGS and GSE Testbed are represented by the part of the general GSE block diagram as shown in Table 4-23

Part of these interfaces represents the communication between the AQGS components located at the launch and integration site and the GSE. The information flow between the GSE Testbed and AQGS consists of RT HKTM, Science Data, and Command Scripts and their Scripts Execution Reports.

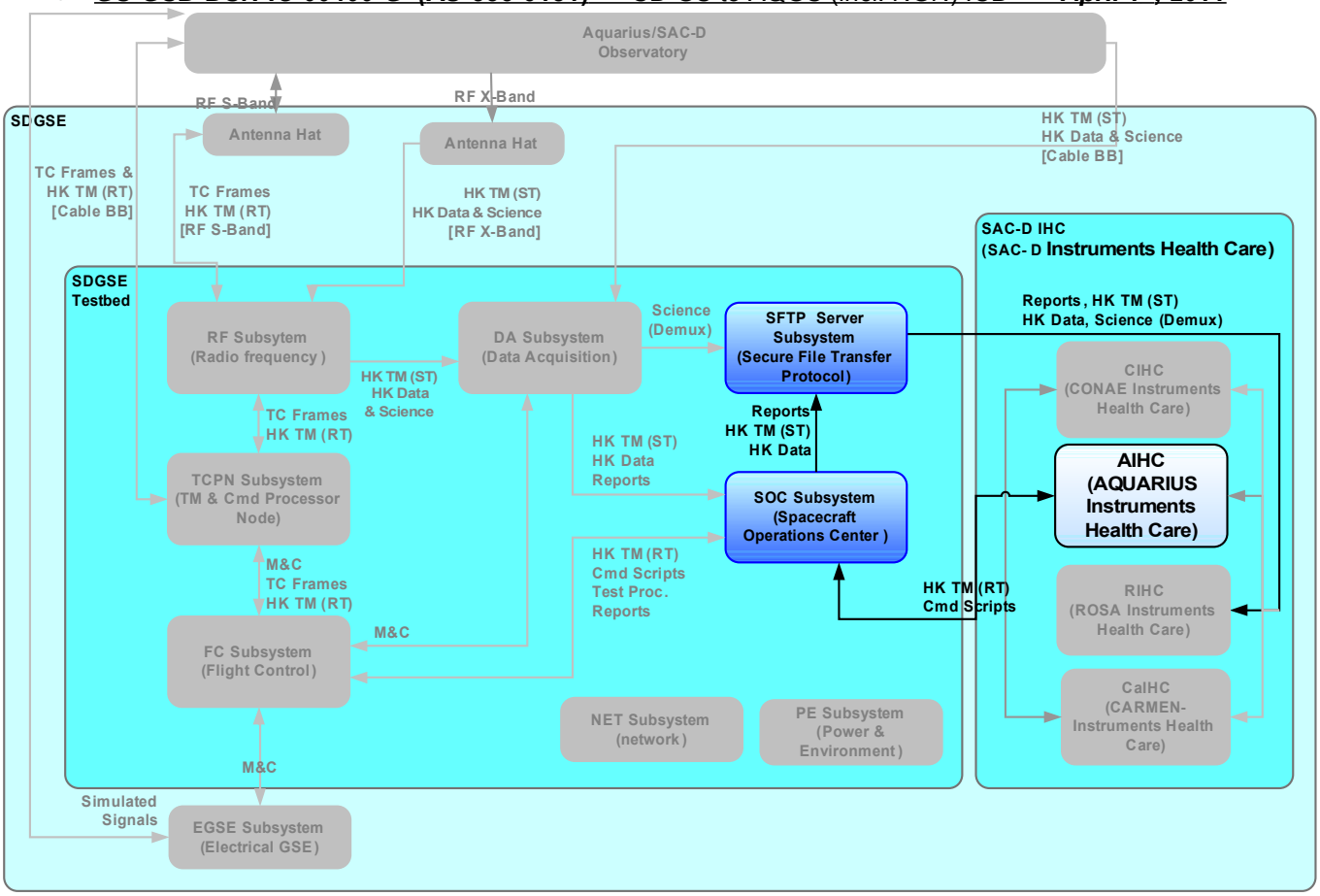

Table 4-23

4.1.1 I-AQIHC-GSETB/SOC

Table 4-24 summarizes the AQLA-GSETB/SOC interfaces taking into account a **classification** based on the transported **data type** and the **transport mechanism**. For each interface type, the transport links and protocols, the formats, and the GSETB and AQLA endpoint systems are specified.

Name	Data Type	Direction	Transport protocols	Formats	GSETB endpoint	AQLA endpoint
AQIHC-GSETB/SOC_TM	OBS HKTM	GSETB to AQLA	TCP/IP	Obs. Tlmy format	SOC	Tlmy viewer
AQLA-GSETB/SOC_CS	Command Script	AQLA to GSETB	SFTP	SCL	SOC	N/A
AQLA-GSETB/SOC_SER	Script Execution Report	GSETB to AQLA	SFTP	Plain text	SOC	N/A

Table 4-24: Interfaces between GSETB and AQIHC.

4.1.1.1 OBS HKTM interface (AQIHC-GSETBSOC_TM)

OBS HKTM may be viewed at the AQIHC, by means of the **Tlmy Viewer** application. This application connects to a TCP/IP port of the SOC to receive a direct broadcast of the TM

sent by the Observatory. The application can be configured to display EU of the received TM.

The OBS HKTM format defined in reference [1] is embedded in the Tlmy Viewer application.

4.1.1.2 Command Script interface (AQIHC-GSETBSOC_CS)

During the launch campaign the AQLA provides SOC with AQ Command Scripts to be executed at the GSETB. These scripts shall be provided via SFTP.
The Command Scripts format is completely specified in references [2,3].

4.1.1.3 Script Execution Report interface (AQIHC-GSETBSOC_SER)

The following Script Execution Report is generated at the GSETB for the AQLA:

ID	Description
SER_AQ_Execution	Script Execution Report Contains a report on the execution of the Command Scripts in a TBD format.

Table 4-25: Script Execution Report.

SFTP shall be used as interface for these Reports.

4.1.2 I-AQIHC-GSETB/SFTPS

Table 4-26 summarizes the AQIHC-GSETB/SFTPS interfaces taking into account a **classification** based on the transported **data type** and the **transport mechanism**. For each interface type, the transport links and protocols, the formats, and the SFTPS and AQIHC endpoint systems are specified.

Interface ID	Data type	Direction	Transport links & protocols	Format	GSETB endpoint	AQIHC endpoint
AQIHC-GSETBSFTPS_AQ	AQ Science	ADPS pulls data from SFTPS	SFTP	Binary	SFTP server	SFTP client
AQIHC-GSETBSFTPS_TM	OBS HKTM	ADPS pulls data from SFTPS	SFTP	Binary	SFTP server	SFTP client

Table 4-26: Interfaces between GSETB/SFTPS and AQIHC.

For more details on these interfaces please refer to Section 2.3

5.0 Anex 1 – PTP Formats

5.1 EOS Command Delivery Format for SACD

Table 5-27 describes the packet the FCS should send through a TCP/IP connection to the PTP Computers to command the Observatory.

Byte #	Description	Size (Bytes)
1-24	EOS Command Delivery Header, (see Table 5-28).	24
25 –8192	Command Data: SACD Telecommand Frame(*)	0-8168

Table 5-27: EOS Command Delivery Format for SACD/Aquarius

The SACD Telecommand Frame(*) size goes from 12 bytes to 132 bytes what is clearly inside the required range of this Telecommand PTP Packed Format Field.

For more details about the SACD Telecommand Frame format refer to reference [1].

Byte #	Description	Size (Bytes)
1	Message Type: Command Data Block (03 hex)	1
2	Spare (00 hex)	1
3	Source Identification (01 hex)	1
4	Destination Identification (00 hex)	1
5	Spare (00 hex)	1
6-12	Message generation time(1) (See Table 5-31)	7
13-14	Spacecraft Identification (00 hex)	2
15-16	Message Sequence Number(2)	2
17-18	EDOS software version number: (00 hex TBD)	2
19-20	Message Length(3)	2
21-24	Spare (00 hex)	4

Table 5-28: EOS Command Delivery Header Format for SACD/Aquarius

Comments on Table 5-28 records follow.

- Message generation time(1):
  The NASA PB-5 Time code format. Not used for SACD and filled with 0 hex.

- Message Sequence Number(2):
  This is an increasing counter from 0 to 65535 that wraps around if necessary. The FCS should increase this counter one-up with each PTP packed send. Not used for SACD and filled with 0 hex.

- Message Length(3):
  This is the number of bytes in the message, including the header and the command data. Range is from 24 to 8192. For example suppose that the command data size is 64 bytes then this field should have: 58 hex = 88 = 64 + 24 (header size).

5.2 SMEX Telemetry Delivery Format for SACD

Table 5-29 describes the packet the FCS should receive through a TCP/IP connection from the PTP Computers with the SACD Telemetry.

Byte #	Description	Size (Bytes)
1-10	SMEX Telemetry Delivery Header, (see Table 5-30).	10
11–4010	Telemetry Data: SACD Telemetry Frame	4000

Table 5-29: SMEX Telemetry Delivery Format for SACD/Aquarius

For more details about the SACD Telemetry Frame format see reference [1].

Byte #	Bit #	Description	Size (Bits)
1-2	1-2	Version number of telemetry header. (For frame data: “01”).	2
1-2	3-16	Length of frame in bytes (including header) [a]	14
3	1	Annotation Flags: Reed-Solomon (RS) decoding enabled flag, (Disabled: “0”).	1
3	2	RS decoding error flag. (Frame could not be corrected: “0”).	1
3	3	Frame CRC enabled flag. (Disabled: “0”).	1
3	4	Frame CRC pass/fail flag (Not used) [b]	1
3	5	Master channel sequence (MCS) checking enabled flag (Disabled: “0”)	1
3	6	MCS number error (Not used) [c]	1
3	7-8	Data inversion flags (Data true:“00”) [d]	2
4	9-10	Frame sync mode flags[e]	2
4	11	Data forward / reverse flag: (Forward: “0”) [f]	1
4	12-16	Data class: (Stripped TDM frame: “00100”) [g]	5
5-10	All	Earth received time of data (without microseconds) (See Table 5-31)	6

Table 5-30: SMEX Telemetry Deliver Header Format for SACD/Aquarius

Comments on Table 5-30 records follow.

- **Length of frame in bytes[a]:**
  This is the length of the frame in bytes, including the header (10 bytes) and the SACD Telemetry Frame (4000 bytes):
  4010 bytes (111110101010 binary)
  Maximum Telemetry Frame length is: 16383 bytes.

- **Frame CRC pass/fail flag[b]:**
  - Pass: “0”
  - Fail: “1”

  This field is only valid for CCSDS Transfer Frame Formats. Not used for SACD.

- **MCS number error[c]:**
  - Number increased monotonically:"0"
  - Increased by 2 or more: "1"

  This field is only valid for CCSDS Transfer Frame Formats. Not used for SACD

- **Data inversion flags[d]:**
  - Data true: "00".
  - Data inverted: "01".
  - Data inverted and corrected: "11"

  The SACD Telemetry does not have bit indetermination (see f.i. [1]), which means that this field value will be always "00".

- **Frame sync mode flags[e]:**
  - Search frame: "00"
  - Check frame: "01"
  - Lock frame: "10"
  - Flywheel frame: "11"

  FCS will receive almost all the values except the "Search frame" that it's used for debugging purposes. The FCS will only use and retransmit as valid synchronized frames those with this status in "Check frame" or "Lock frame". All the "Flywheel" frames will be discarded as non valid.

- **Data forward / reverse flag[f]:**
  - Forward: "0"
  - Reverse: "1"

  This bit will always set to "0" for the SACD.

- **Data class[g]:**
  - CCSDS frame: 1
  - CCSDS Packet: 2
  - TDM frame: 3
  - Stripped TDM frame: 4

The SACD Telemetry Format corresponds to the Stripped TDM frame case ("00100").

5.3 NASA PB-5 Time Code Format

Table 5-31 describes the NASA PB-5 Time code format that is used in the previous sections.

Byte #	Bit #	Description	Size (Bits)
1	1	PB-5 flag bit, set to "0"	1
1-2	2-15	Truncated Julian day (14bits). Truncate the most significant decimal digits, retaining only the four least significant decimal digits ranging from 0000 to 9999. The current Julian day epoch begins on October 10,1995, and continues for a period of 27 years.	14
2	16	Seconds of day (17bits), most significant bit.	1
3-4	1-16	Seconds of day (17bits), 16 least significant.	16

		Integer value from 0 to 86399.	
5-6	1-10	Milliseconds of the second (10bits). Integer value from 0 to 999.	10
5-6	11-16	Microseconds of milliseconds (10bits), 6 most significant bits. Integer value from 0 to 999. (+)	6
7	1-4	Microseconds of milliseconds, 4 least significant. (+)	4
7	5-8	Fill with 0 hex	4

Table 5-31: The NASA PB-5 Time code format

Microseconds of milliseconds(+):
If the microseconds weren't available both fields should be filled with 0 hex, this applies to Section 5.2.

6.0 Annex 2 – Orbit Dynamics Products Formats

6.1 TLE

6.1.1 Naming Convention

The TLE file name is in the form:

CODS_YYYYMMDD_HHMMSS_SACD_TLE.TLE

where: **CODS** = service identifier (CODS = CONAE Orbit Dynamic Service)
YYYYMMDD_HHMMSS = data generation time
SACD = satellite identifier (SACD = SAC-D)

6.1.2 Format Description

The TLE file is an ASCII structured file. A single NORAD-TLE file consists of three ASCII coded lines separated by <LF><CR> characters; blank character is used to separate fields:

```
Line 0: SAC-D
Line 1: 1 NNNNNU NNNNNAAA NNNNN.NNNNNNNN +.NNNNNNNN +NNNNN-N +NNNNN-N N NNNNN
Line 2: 2 NNNNN NNN.NNNN NNN.NNNN NNNNNNN NNN.NNNN NNN.NNNN NN.NNNNNNNNNNNNN
```

Line 0 is the satellite name.
Lines 1 and 2 are the standard Two-Line Orbital Element Set Format identical to that used by NORAD and NASA. The format description is given in Table 6-32.

Line 1	
Column	**Description**
01	Line Number of Element Data
03-07	Satellite Number
08	Classification (U = Unclassified, C = Classified)
10-11	International Designator (Last two digits of launch year)
12-14	International Designator (Launch number of the year)
15-17	International Designator (Piece of the launch)
19-20	Epoch Year (Last two digits of year)
21-32	Epoch (Day of the year and fractional portion of the day)
34-43	First Time Derivative of the Mean Motion [-.99999999, .99999999]
45-52	Second Time Derivative of Mean Motion (decimal point assumed)
54-61	BSTAR drag term (decimal point assumed)
63	Ephemeris type [0-7]
65-68	Element number [1-9999]
69	Checksum (Modulo 10) (Letters, blanks, periods, plus signs = 0; minus signs = 1)

Line 2	
Column	**Description**
01	Line Number of Element Data

03-07	Satellite Number
09-16	Inclination [0.0000, 180.0000 Degrees]
18-25	Right Ascension of the Ascending Node [0.0000, 359.9999 Degrees]
27-33	Eccentricity (decimal point assumed)
35-42	Argument of Perigee [0.0000, 359.9999 Degrees]
44-51	Mean Anomaly [0.0000, 359.9999 Degrees]
53-63	Mean Motion [Revs per day]
64-68	Revolution number at epoch [1, 99999]
69	Checksum (Modulo 10)

Table 6-32: NORAD Two-Line Element Set Format

All other columns are blank or fixed.

6.1.3 File Example

```
SAC-D
1 00001U 05001F   06132.00000000  .00000000  00000-0  24197-3 0 99994
2 00001  97.8509 139.6190 0004961 168.1784  77.4676 14.85014435000007
```

Table 6-33: TLE File Example

6.2 Predicted Ephemeris and Orbit Ephemeris

The Ephemeris products contain a list of time-tagged ephemeris in chronological order, referred to a given coordinate system.

The ephemeris provided in one Ephemeris product can be one of the following types: Cartesian position and velocity or Geodetic position.

Ephemeris Type Acronym	Description
XYZ	Cartesian Position and Velocity
LLH	Latitude, Longitude, Height

Table 6-34: Available Ephemeris Types.

The Predicted Ephemeris product provides a prediction of future ephemeris of the S/C, typically for a time span of 1 week.

The Orbit Ephemeris product gives a smooth propagation of the S/C ephemeris inside the time boundaries where the Orbit Determination has been carried out. The data contained in this product is provided post-facto, meaning that the time tags of the ephemeris correspond to times in the past.

In contrast with the Predicted Ephemeris product, the ephemeris contained in the Orbit Ephemeris products have precisely defined error bounds.

6.2.1 Naming Convention

The Ephemeris file name is in the form:

CODS_YYYYMMDD_HHMMSS_SACD_PRODTYPE_REFSYS_EPHTYPE_X.TXT

where: **CODS** = service identifier (CODS = CONAE Orbit Dynamic Service)
YYYYMMDD_HHMMSS = data generation time
SACD = satellite identifier (SACD = SAC-D)
PRODTYPE = Product Type
- **Predicted Ephemeris = PREDEPHEM,**
- **Orbit Ephemeris = ORBEPHEM**

REFSYS = Reference System (TOD, GEOD)
EPHTYPE = Ephemeris Type (XYZ, LLH)
X = O for Operational / = D for Definitive

6.2.2 Format Description

Both Predicted and Orbit Ephemeris products share the same format, which we shall refer to as Ephemeris File (Format).

The Ephemeris file is an ASCII structured file, containing S/C ephemeris information, based on a given reference system.

Available references are: MJ2K, TOD, Geodetic, as described in Table 6-35.

Reference System Acronym	Description
MJ2K	Mean of J2000
TOD	True of Date
GEOD	Geodetic (WGS84)

Table 6-35: Available Reference Systems for Ephemeris files.

Each time-tagged ephemeris “record” is ASCII coded, having a maximum length of 118 characters.

A single Ephemeris file consists of a sequence of “n” ephemeris records (typically in the order of 10000 for a 1-week Predicted Ephemeris product).

Two types of records are foreseen :
- The File Header, which is the first record in the file, reports the time of the Ephemeris file generation, number of Data Records in the file, plus the S/C name, IDs, reference system, time system (UTC, GPS), etc.
- The Data Records, include the time tag, and the ephemeris in its corresponding type. Data Records type are consistent with ephemeris types, ie. Cartesian, Keplerian, etc.

Time is expressed in the YYYY/MM/DDD HH:MM:SS.SSSSSSSS format.

The time step between subsequent records is fixed and has typically the value of 60 sec.

Each Data Record is written in ASCII fixed format, being the units for the output [Km], [Km/s], and [deg].

Leading zeros are represented as blanks. Separation character is one blank.

The detailed format of each record type is given in Table 6-36 (header), Table 6-37 (Cartesian Data Record), Table 6-38 (Geodetic Data Record).

Column	Content	ASCII format
1	Header Tag (equal to "*HEADER")	Character String
2	S/C Name	Character String
3	Number of Data Records in File	Integer
4	Ephemeris Type (XYZ, OKE, LLH, LLR)	Character String
5	Time System (UTC, GPS)	Character String
6	Reference System (MJ2K, TOD, ECF, GEOC, GEOD)	Character String
7	Fixed to "PRO"	Character String
8	S/C NORAD Catalog number [0, 99999]	Integer
9	S/C NORAD International Designator (6-characters string)	Character String
10	Fixed to "CONAE"	Character String
11	File Generation Time Tag (YYYY/MM/DDD HH:MM:SS)	Character String

Table 6-36: Ephemeris File Header Record Format

Column	Content	ASCII format
1	Time tag (YYYY/MM/DDD HH:MM:SS.SSSSSSSS)	Character String
2	x-component (Km) of spacecraft position	Fixed point (F14.6)
3	y-component (Km) of spacecraft position	Fixed point (F14.6)
4	z-component (Km) of spacecraft position	Fixed point (F14.6)
5	x-component (Km/s) of spacecraft velocity	Fixed point (F14.10)
6	y-component (Km/s) of spacecraft velocity	Fixed point (F14.10)
7	z-component (Km/s) of spacecraft velocity	Fixed point (F14.10)

Table 6-37: Ephemeris File Cartesian Data Record Format

Column	Content	ASCII format
1	Time tag (YYYY/MM/DDD HH:MM:SS.SSSSSSSS)	Character String
2	Geodetic Latitude (deg)	Fixed point (F14.5)
3	Geodetic Longitude (deg)	Fixed point (F14.5)
4	Geodetic Height (Km)	Fixed point (F14.3)

Table 6-38: Ephemeris File Geodetic Data Record Format

6.2.3 File Example

The example shows a MJ2K Cartesian Ephemeris File. Column numbers in the first and last line have been added to facilitate the reading and are not part of the actual table file.

```
----+----1----+----2----+----3----+----4----+----5----+----6----+----7----+----8----+----9----+----0----+----1----+----2
*HEADER SAC-D        4044 XYZ        UTC        MJ2K       PRO        26620 00075B      CONAE      2006/10/13 17:43:09
2006/10/10 17:27:58.00000000   -1056.495950    1347.958014   -6880.788369   7.0653259556  -1.9908944642  -1.4755993754
2006/10/10 17:28:58.00000000    -630.744291    1225.885465   -6955.454249   7.1216580401  -2.0768303645  -1.0124419967
2006/10/10 17:29:58.00000000    -202.467354    1098.904864   -7002.201263   7.1494753646  -2.1544426816  -0.5452778181
2006/10/10 17:30:58.00000000     226.620296     967.524930   -7020.844436   7.1486734911  -2.2234267547  -0.0759563563
2006/10/10 17:31:58.00000000     654.801104     832.271673   -7011.310022   7.1192571976  -2.2835109510   0.3936652602
2006/10/10 17:32:58.00000000    1080.361088     693.686395   -6973.635782   7.0613409835  -2.3344573421   0.8617282246
----+----1----+----2----+----3----+----4----+----5----+----6----+----7----+----8----+----9----+----0----+----1----+----2
```

Table 6-39: Ephemeris File Example.

6.3 FDF State Vector

The State vector product generated by the FDF, contains the position, velocity and other satellite parameters such as Drag Coefficient, with an UTC time stamp and referred to a given coordinate system.

The State Vector shall be in Cartesian position and velocity.

SV Type Acronym	Description
XYZ	Cartesian Position and Velocity

Available Ephemeris Types.

6.3.1 Format Description

The FDF State Vector is in the Freeflyer format.

The file is an ASCII structured file, containing UTC epoch, S/C state vector in MJ2K Cartesian, Mass and Drag Coefficient.

Reference System Acronym	Description
MJ2K	Mean of J2000

Available Reference Systems for FDF State Vector files.

The file consists of a header identifying the spacecraft name, and data records enclosed between braces “{}”.

Each data consists of three fields: a title, the equal sign, and the data, terminated by a comma character.

EpochTime is expressed in the “MMM DD YYYY HH:MM:SS.SSS” (UTC) format.

The detailed format of each record type is given in the following tables.

Column	Content	ASCII format
1	S/C ID	Spacecraft “SAC-D”

FDF State Vector File Header Format

Row	Content	Title	Title Field Format	Data Field
1	Data Records Start Marker	N/A	N/A	{
2	UTC Epoch	Epoch	2X,A21,”=”,2X	“MMM DD YYYY HH:MM:SS.SSS”
3	x-component (Km) of spacecraft position	X	2X,A21,”=”,2X	Fixed point (F14.6)
4	y-component (Km) of spacecraft position	Y	2X,A21,”=”,2X	Fixed point (F14.6)
5	z-component (Km) of spacecraft position	Z	2X,A21,”=”,2X	Fixed point (F14.6)
6	x-component (Km/s) of spacecraft velocity	VX	2X,A21,”=”,2X	Fixed point (F14.10)

7	y-component (Km/s) of spacecraft velocity	VY	2X,A21,"=",2X	Fixed point (F14.10)
8	z-component (Km/s) of spacecraft velocity	VZ	2X,A21,"=",2X	Fixed point (F14.10)
9	Atmospheric Drag Coefficient	Cd	2X,A21,"=",2X	Fixed point (F14.3)
10	Solar Radiation Pressure Coefficient	Cr	2X,A21,"=",2X	Fixed point (F14.3)
11	Area Exposed to Atmospheric Drag (m^2)	DragArea	2X,A21,"=",2X	Fixed point (F14.3)
12	Area Exposed to Solar Radiation Pressure (m^2)	SRPArea	2X,A21,"=",2X	Fixed point (F14.3)
13	Dry Mass (kg)	VehicleDryMass	2X,A21,"=",2X	Fixed point (F14.3)
14	Data Records End Marker	N/A	N/A	};

FDF State Vector Data Records Format

6.3.2 File Example

The example shows an FDF State Vector File. Column numbers in the first and last line have been added to facilitate the reading and are not part of the actual table file.

```
----+----1----+----2----+----3----+----4----+----5----+----6----+----7----+----8----+----9----+----0----+----1----+----2
Spacecraft "SAC-D"
{
  Epoch                = "Jan  1 2006 13:04:12.171",
  X                    =     1921.534927,
  Y                    =     2612.266378,
  Z                    =     6288.880120,
  VX                   =   -1.8993718779,
  VY                   =   -6.4841097864,
  VZ                   =    3.2663325011,
  Cd                   =           2.618,
  Cr                   =           1.000,
  DragArea             =           4.500,
  SRPArea              =           4.100,
  VehicleDryMass       =         464.000,
};
----+----1----+----2----+----3----+----4----+----5----+----6----+----7----+----8----+----9----+----0----+----1----+----2
```

FDF State Vector File Example.

6.4 Ground Station Contacts

6.4.1 Naming Convention

The Ground Station Contacts file name is in the form:

CODS_YYYYMMDD_HHMMSS_SACD_GSCONTACTS_GSID.TXT

where: **CODS** = service identifier (CODS = CONAE Orbit Dynamic Service)
YYYYMMDD_HHMMSS = data generation time
SACD = satellite identifier (SACD = SAC-D)
GSCONTACTS = GS Contacts Product Identifier
GSID = GS or GS Network ID

6.4.2 Format Description

The GS Contacts file is an ASCII structured file, containing S/C ground station contact information in a given time interval.

Each GS Contacts record is ASCII coded, with multiple fields separated by tabs, thus, the maximum length of each record is variable.

A single GS Contacts file consists of a sequence of “n” GS Contacts records.

Two types of records are foreseen :

- The File Header, which is the first record in the file, gives the titles of the GS Contacts fields.
- The Data Records, include S/C name, start and end time of contact, Ground Station ID, Max. Elevation, Rise & Set Azimuth, etc.

Time is expressed in the YYYY/MM/DDD HH:MM:SS.S format.

Each Data Record is written in ASCII, fields separated by tabs, being the units for the output [Km] and [deg].

Leading zeros are represented as blanks. Separation character are tabs.

The detailed format of each record type is given in Table 6-40 (header), Table 6-41 (Data Record).

Column	Content	ASCII format
1	Fixed to Name	Character String
2	Fixed to EventID	Character String
3	Fixed to Start	Character String
4	Fixed to End	Character String
5	Fixed to Duration	Character String
6	Fixed to ElMax	Character String
7	Fixed to ElCut	Character String
8	Fixed to AzRise	Character String
9	Fixed to AzSet	Character String
10	Fixed to RangeMin	Character String
11	Fixed to TLENumber	Character String
12	Fixed to RevNum	Character String
13	Fixed to Comments	Character String

Table 6-40: GS Contacts File Header Record Format

Column	Content	ASCII format
1	S/C Name	Character String
2	GS ID	Character String
3	Start Time: YYYY/MM/DDD HH:MM:SS.S	Character String
4	End Time: YYYY/MM/DDD HH:MM:SS.S	Character String
5	Duration: HH:MM:SS	Fixed point
6	Maximum Elevation (deg)	Fixed point
7	Elevation Cut (deg)	Fixed point
8	Rise Azimuth (deg)	Fixed point
9	Set Azimuth (deg)	Fixed point
10	Minimum Range (Km)	Fixed point
11	TLE Number	Integer
12	Revolution Number	Integer
13	Comments	Character String

Table 6-41: GS Contacts File Data Record Format

6.4.3 File Example

The example in Table 6-49 of Section 6.9.2 shows a GS Contacts File.

6.5 South Atlantic Anomaly Passes

6.5.1 Naming Convention

The South Atlantic Anomaly Passes file name is in the form:

CODS_YYYYMMDD_HHMMSS_SACD_SAA.TXT

where: **CODS** = service identifier (CODS = CONAE Orbit Dynamic Service)
YYYYMMDD_HHMMSS = data generation time
SACD = satellite identifier (SACD = SAC-D)
SAA = SAA Passes Product Identifier

6.5.2 Format Description

The SAA Passes file is an ASCII structured file, containing S/C passes over the South Atlantic Anomaly in a given time interval.

Each SAA Passes record is ASCII coded, with multiple fields separated by tabs, thus, the maximum length of each record is variable.

A single SAA Passes file consists of a sequence of “n” SAA Passes records.

Two types of records are foreseen:

- The File Header, which is the first record in the file, gives the titles of the SAA Passes fields.
- The Data Records, include S/C name, start and end time of SAA pass, duration, etc.

Time is expressed in the YYYY/MM/DDD HH:MM:SS.S format.

Each Data Record is written in ASCII, fields separated by tabs.

The detailed format of each record type is given in Table 6-42 (header), Table 6-43 (Data Record).

Column	Content	ASCII format
1	Fixed to Name	Character String
2	Fixed to EventID	Character String
3	Fixed to Start	Character String
4	Fixed to End	Character String
5	Fixed to Duration	Character String
6	Fixed to ElMax	Character String
7	Fixed to ElCut	Character String
8	Fixed to AzRise	Character String
9	Fixed to AzSet	Character String
10	Fixed to RangeMin	Character String

11	Fixed to TLENumber	Character String
12	Fixed to RevNum	Character String
13	Fixed to Comments	Character String

Table 6-42: SAA Passes File Header Record Format

Column	Content	ASCII format
1	S/C Name	Character String
2	Fixed to SAA	Character String
3	Start Time: YYYY/MM/DDD HH:MM:SS.S	Character String
4	End Time: YYYY/MM/DDD HH:MM:SS.S	Character String
5	Duration: HH:MM:SS	Character String
6	Empty	N/A
7	Empty	N/A
8	Empty	N/A
9	Empty	N/A
10	Empty	N/A
11	TLE Number	Integer
12	Empty	N/A
13	Comments	Character String

Table 6-43: SAA Passes File Data Record Format

6.5.3 File Example

The example in Table 6-50 of Section 6.9.2 shows a SAA Passes File.

6.6 Eclipses

6.6.1 Naming Convention

The Eclipses file name is in the form:

CODS_YYYYMMDD_HHMMSS_SACD_EVENTS.TXT

where: **CODS** = service identifier (CODS = CONAE Orbit Dynamic Service)
YYYYMMDD_HHMMSS = data generation time
SACD = satellite identifier (SACD = SAC-D)
ECL = Eclipses Product Identifier

6.6.2 Format Description

The Eclipses file is an ASCII structured file, containing S/C eclipses times in a given time interval.

Each Eclipses record is ASCII coded, with multiple fields separated by tabs, thus, the maximum length of each record is variable.

A single Eclipses file consists of a sequence of “n” Eclipses records.

Two types of records are foreseen:

- The File Header, which is the first record in the file, gives the titles of the Eclipses fields.
- The Data Records, include S/C name, start and end time of Eclipse, duration, etc.

Time is expressed in the YYYY/MM/DDD HH:MM:SS.S format.

Each Data Record is written in ASCII, fields separated by tabs.

The detailed format of each record type is given in Table 6-44 (header), Table 6-45 (Data Record).

Column	Content	ASCII format
1	Fixed to Name	Character String
2	Fixed to EventID	Character String
3	Fixed to Start	Character String
4	Fixed to End	Character String
5	Fixed to Duration	Character String
6	Fixed to ElMax	Character String
7	Fixed to ElCut	Character String
8	Fixed to AzRise	Character String
9	Fixed to AzSet	Character String
10	Fixed to RangeMin	Character String
11	Fixed to TLENumber	Character String
12	Fixed to RevNum	Character String
13	Fixed to Comments	Character String

Table 6-44: Eclipses File Header Record Format

Column	Content	ASCII format
1	S/C Name	Character String
2	Fixed to ECL	Character String
3	Start Time: YYYY/MM/DDD HH:MM:SS.S	Character String
4	End Time: YYYY/MM/DDD HH:MM:SS.S	Character String
5	Duration: HH:MM:SS	Character String
6	Empty	N/A
7	Empty	N/A
8	Empty	N/A
9	Empty	N/A
10	Empty	N/A
11	TLE Number	Integer
12	Empty	N/A
13	Comments	Character String

Table 6-45: Eclipses File Data Record Format

6.6.3 File Example

The example in Table 6-51 of Section 6.9.2 shows a Eclipses File.

6.7 Events

6.7.1 Naming Convention

The Events file name is in the form:

CODS_YYYYMMDD_HHMMSS_SACD_EVENTS.TXT

where: **CODS** = service identifier (CODS = CONAE Orbit Dynamic Service)
YYYYMMDD_HHMMSS = data generation time
SACD = satellite identifier (SACD = SAC-D)
EVENTS = Events Product Identifier

6.7.2 Format Description

The Events file is an ASCII structured file, containing S/C events information in a given time interval. Events are composed by ground station contacts, SAA passes and Eclipses.

Each Events record is ASCII coded, with multiple fields separated by tabs, thus, the maximum length of each record is variable.

A single Events file consists of a sequence of “n” Events records.

Four types of records are foreseen:

- The File Header, which is the first record in the file, gives the titles of the Events fields.
- The GS Contact Data Record, as described in Section 6.4.2.
- The SAA pass Record, as described in Section 6.5.2.
- The Eclipse Record, as described in Section 6.6.2.

Time is expressed in the YYYY/MM/DDD HH:MM:SS.S format.

Each Data Record is written in ASCII, fields separated by tabs, being the units for the output [Km] and [deg].

Leading zeros are represented as blanks. Separation character are tabs.

The detailed format of each record type is given in Table 6-40 (header), Table 6-41 (GS Contact Data Record), Table 6-43 (SAA Pass Data Record) and Table 6-45 (Eclipse Data Record).

6.7.3 File Example

The example in Table 6-52 of Section 6.9.2 shows an Events File.

6.8 Maneuvers List

6.8.1 Naming Convention

The Maneuvers List file name is in the form:

CODS_YYYYMMDD_HHMMSS_SACD_MANLIST.TXT

where: **CODS** = service identifier (CODS = CONAE Orbit Dynamic Service)
YYYYMMDD_HHMMSS = data generation time
SACD = satellite identifier (SACD = SAC-D)
MANLIST = Maneuver List Product Identifier

6.8.2 Format Description

The Maneuvers List file is an ASCII structured file, containing S/C orbital maneuver information.

Each maneuver record is ASCII coded, having a maximum length of 96 characters.

A single Maneuver List file consists of a sequence of "n" Maneuver List records.

Three types of records are foreseen:

- The File Header, which is the first record in the file, displays the titles of the Maneuver fields.
- The separator, composed by 96 contiguous "-" characters.
- The Data Records, include the Start time, duration, Thrust Force, coordinates in the RTN frame and Velocity increment.

Time is expressed in the YYYY/MM/DDD HH:MM:SS.SSS format.

Each Data Record is written in ASCII fixed format, being the units for the output [sec], [Newton], and [m/s].

Leading zeros are represented as blanks. Separation character is one blank.

The detailed format of each record type is given in Table 6-46Table 6-36 (header) and Table 6-47 (Data Record).

Column	Content	ASCII format
1	Fixed to Start [UTC]	Character String
2	Fixed to DT [sec]	Character String
3	Fixed to Thrust [N]	Character String
4	Fixed to Xo[YxZ]	Character String
5	Fixed to Yo[-ONormal]	Character String
6	Fixed to Zo[Nadir]	Character String
7	Fixed to DV[m/s]	Character String

Table 6-46: Manevuers List File Header Record Format

Column	Content	ASCII format
1	Maneuver Start Time (YYYY/MM/DDD HH:MM:SS.SSS)	Character String
2	Maneuver Duration (sec)	Fixed point (F10.1)
3	Thrust Force (Newton)	Fixed point (F10.3)
4	Transversal component of unit vector direction of Thrust	Fixed point (F10.7)
5	Negative Normal component of unit vector direction of Thrust	Fixed point (F10.7)
6	Negative Radial component of unit vector direction of Thrust	Fixed point (F10.7)
7	Velocity Increment (m/s)	Fixed point (F10.5)

Table 6-47: Maneuvers List File Data Record Format

6.8.3 File Example

The example shows a Maneuvers List File. Column numbers in the first and last line have been aded to facilitate the reading and are not part of the actual table file.

```
----+----1----+----2----+----3----+----4----+----5----+----6----+----7----+----8----+----9----
+----0
Start[UTC]                    DT[sec]    Thrust[N]    Xo[YxZ]   Yo[-ONormal]  Zo[Nadir]   DV[m/s]
-----------------------------------------------------------------------------------------------
2005/08/10 20:43:32.000        19.0       2.700   1.0000000   0.0000000   0.0000000     0.11104
2005/12/14 14:52:04.000         4.0       2.700   1.0000000   0.0000000   0.0000000     0.02338
2005/12/21 19:09:52.000         4.0       2.700   1.0000000   0.0000000   0.0000000     0.02338
2006/02/08 20:22:55.000         5.0       2.700   1.0000000   0.0000000   0.0000000     0.02922
2006/06/07 13:10:00.000        11.0       2.700   1.0000000   0.0000000  -0.0001152     0.06429
----+----1----+----2----+----3----+----4----+----5----+----6----+----7----+----8----+----9----
+----0
```

Table 6-48: Maneuvers List File Example.

6.9 AOCS Quaternions

6.9.1 Format Description

The available format is Space Separated Values (SSV):

Each line of the file contains an attitude record, with the following fields, separated by one space:

- UTC Date: YYYY/MM/DD
- UTC Time hh:mm:ss.sss
- TAI Date: YYYY/MM/DD
- TAI Time: hh:mm:ss.sss
- Component q1 of AOCS quaternion tuple
- Component q2 of AOCS quaternion tuple
- Component q3 of AOCS quaternion tuple
- Component q4 of AOCS quaternion tuple

Each attitude record is separated in time with the next by one second.

In the quaternion tuple, (q1,q2,q3) is the rotation's axis unit vector multiplied by the sine of half the rotation's angle, and q4 is the cosine of half the rotation's angle.

The AOCS quaternion tuple represents the transformation from a vector expressed in the J2000 inertial system (mean vernal equinox, mean equator, at Terrestrial Time J2000), to a vector expressed in the Platform (master cube) reference system.

6.9.2 Quaternion File Example

See selected file examples section.

6.10 Selected File Examples

Name	EventID	Start	End	Duration	ElMax	ElCut	AzRise	AzSet	RangeMin	TLENumber	RevNum	Comments
SAC-D	MGS	2006/10/12 07:23:09.0	2006/10/12 07:34:45.0	00:11:36	12.4	0	186.8	77.5	2063.7	2235	31322	Comment1
SAC-D	AGS	2006/10/12 08:02:32.5	2006/10/12 08:15:20.5	00:12:48	20.7	0	209.8	340.8	1578.5	2235	31322	Comment2

Table 6-49: GS Contacts File Example.

Name	EventID	Start	End	Duration	ElMax	ElCut	AzRise	AzSet	RangeMin	TLENumber	RevNum	Comments
SAC-D	SAA	2006/10/12 08:43:02.4	2006/10/12 08:56:59.9	00:13:57							2235	Comment
SAC-D	SAA	2006/10/12 10:22:26.9	2006/10/12 10:35:59.3	00:13:32							2235	Comment
SAC-D	SAA	2006/10/12 12:00:50.2	2006/10/12 12:14:50.2	00:14:00							2235	Comment
SAC-D	SAA	2006/10/12 13:40:25.2	2006/10/12 13:51:25.8	00:11:00							2235	Comment

Table 6-50: SAA Passes File Example.

Name	EventID	Start	End	Duration	ElMax	ElCut	AzRise	AzSet	RangeMin	TLENumber	RevNum	Comments
SAC-D	ECL	2006/10/12 07:36:07.0	2006/10/12 08:08:13.0	00:32:06							2235	Comment
SAC-D	ECL	2006/10/12 09:15:03.0	2006/10/12 09:47:09.0	00:32:06							2235	Comment
SAC-D	ECL	2006/10/12 10:53:59.0	2006/10/12 11:26:05.0	00:32:06							2235	Comment
SAC-D	ECL	2006/10/12 12:32:55.0	2006/10/12 13:05:01.0	00:32:06							2235	Comment
SAC-D	ECL	2006/10/12 14:11:51.0	2006/10/12 14:43:57.0	00:32:06							2235	Comment
SAC-D	ECL	2006/10/12 15:50:47.0	2006/10/12 16:22:53.0	00:32:06							2235	Comment

Table 6-51: Eclipses File Example.

Name	EventID	Start	End	Duration	ElMax	ElCut	AzRise	AzSet	RangeMin	TLENumber	RevNum	Comments
SAC-D	MGS	2006/10/12 07:23:09.0	2006/10/12 07:34:45.0	00:11:36	12.4	0	186.8	77.5	2063.7	2235	31322	Comments
SAC-D	ECL	2006/10/12 07:36:07.0	2006/10/12 08:08:13.0	00:32:06						2235		Comments
SAC-D	AGS	2006/10/12 08:02:32.5	2006/10/12 08:15:20.5	00:12:48	20.7	0	209.8	340.8	1578.5	2235	31322	Comments
SAC-D	SKS	2006/10/12 08:12:23.9	2006/10/12 08:25:53.9	00:13:30	31.2	0	15.4	162.8	1231.3	2235	31322	Comments
SAC-D	SAA	2006/10/12 08:43:02.4	2006/10/12 08:56:59.9	00:13:57						2235		Comments
SAC-D	MGS	2006/10/12 09:02:04.4	2006/10/12 09:15:04.4	00:13:00	21.5	0	173.1	40.8	1582	2235	31323	Comments
SAC-D	ECL	2006/10/12 09:15:03.0	2006/10/12 09:47:09.0	00:32:06						2235		Comments
SAC-D	AGS	2006/10/12 09:44:45.7	2006/10/12 09:52:45.7	00:08:00	4.4	0	263.9	334.4	2656.6	2235	31323	Comments
SAC-D	SKS	2006/10/12 09:50:47.3	2006/10/12 10:04:53.3	00:14:06	57.5	0	28.9	197.4	832.2	2235	31323	Comments
SAC-D	SAA	2006/10/12 10:22:26.9	2006/10/12 10:35:59.3	00:13:32						2235		Comments
SAC-D	MGS	2006/10/12 10:40:38.8	2006/10/12 10:54:38.8	00:14:00	39.1	0	160.4	4.9	1082.2	2235	31324	Comments
SAC-D	ECL	2006/10/12 10:53:59.0	2006/10/12 11:26:05.0	00:32:06						2235		Comments

Table 6-52: Events File Example

```
----+----1----+----2----+----3----+----4----+----5----+----6----+----7----+----8----+----9----+----0
2003/03/28 03:18:05.021 2003/03/28 03:18:37.021 -0.2777868 -0.0233988 -0.9436776 -0.1782120
2003/03/28 03:18:05.056 2003/03/28 03:18:37.056 -0.2778031 -0.0233957 -0.9436726 -0.1782135
2003/03/28 03:18:05.091 2003/03/28 03:18:37.091 -0.2778194 -0.0233926 -0.9436676 -0.1782151
2003/03/28 03:18:05.125 2003/03/28 03:18:37.125 -0.2778357 -0.0233896 -0.9436626 -0.1782166
2003/03/28 03:18:05.157 2003/03/28 03:18:37.158 -0.2778520 -0.0233865 -0.9436575 -0.1782181
----+----1----+----2----+----3----+----4----+----5----+----6----+----7----+----8----+----9----+----0
```

Table 6-53: AOCS Quaternions File Example

7.0 Annex 3

7.1 SDMOC Initial Schedule Request Example i-file (single spaced and no spaces between commas)

,SACD, SGS, 2008224004833, 2008224010038, TR1, 33360, S1
,SACD, WPS, 2008224022647, 2008224024013, TR1, 33361, S1
,SACD, SGS, 2008224040508, 2008224041842, TR1, 33362, S1
,SACD, WPS, 2008224054258, 2008224055618, TR1, 33363, S1
,SACD, SGS, 2008224235311, 2008225000525, TR1, 33374, S1
,SACD, WPS, 2008225013134, 2008225014449, TR1, 33375, S1
,SACD, SGS, 2008225031001, 2008225032328, TR1, 33376, S1
,SACD, WPS, 2008225044755, 2008225050127, TR1, 33377, S1
,SACD, MGS, 2008226002757, 2008226003806, TR1, 33389, S1
,SACD, SGS, 2008226021433, 2008226022757, TR1, 33390, S1
,SACD, ASF, 2008226035259, 2008226040629, TR1, 33391, S1
,SACD, SGS, 2008226053051, 2008226054408, TR1, 33392, S1
,SACD, SGS, 2008227011920, 2008227013218, TR1, 33404, S1
,SACD, WPS, 2008227025736, 2008227031121, TR1, 33405, S1
,SACD, SGS, 2008227043547, 2008227044917, TR1, 33406, S1
,SACD, WPS, 2008227061318, 2008227062648, TR1, 33407, S1
,SACD, SGS, 2008228002401, 2008228003616, TR1, 33418, S1
,SACD, SG3, 2008228020221, 2008228021546, TR1, 33419, S1
,SACD, PF2, 2008229005925, 2008229010836, TR1, 33433, S1
,SACD, SGS, 2008229024515, 2008229025906, TR1, 33434, S1
,SACD, WPS, 2008229042330, 2008229043706, TR1, 33435, S1
,SACD, WPS, 2008230001142, 2008230002405, TR1, 33447, S1
,SACD, SGS, 2008230015004, 2008230020333, TR1, 33448, S1
,SACD, WPS, 2008230032828, 2008230034201, TR1, 33449, S1

7.2 Forecast Schedule Example s-file

W0834-2777, SACD, SGS, 2008224004833, 2008224010038, TR1, 33360, S1
W0834-2778, SACD, WPS, 2008224022647, 2008224024013, TR1, 33361, S1
W0834-2779, SACD, SGS, 2008224040508, 2008224041842, TR1, 33362, S1
W0834-2780, SACD, WPS, 2008224054258, 2008224055618, TR1, 33363, S1
W0834-2781, SACD, SGS, 2008224235311, 2008225000525, TR1, 33374, S1
W0834-2782, SACD, WPS, 2008225013134, 2008225014449, TR1, 33375, S1
W0834-2783, SACD, SGS, 2008225031001, 2008225032328, TR1, 33376, S1
W0834-2784, SACD, WPS, 2008225044755, 2008225050127, TR1, 33377, S1
W0834-2785, SACD, MGS, 2008226002757, 2008226003806, TR1, 33389, S1
W0834-2786, SACD, SGS, 2008226021433, 2008226022757, TR1, 33390, S1
W0834-2787, SACD, ASF, 2008226035259, 2008226040629, TR1, 33391, S1
W0834-2788, SACD, SGS, 2008226053051, 2008226054408, TR1, 33392, S1
W0834-2789, SACD, SGS, 2008227011920, 2008227013218, TR1, 33404, S1
W0834-2790, SACD, WPS, 2008227025736, 2008227031121, TR1, 33405, S1
W0834-2791, SACD, SGS, 2008227043547, 2008227044917, TR1, 33406, S1
W0834-2792, SACD, WPS, 2008227061318, 2008227062648, TR1, 33407, S1
W0834-2793, SACD, SGS, 2008228002401, 2008228003616, TR1, 33418, S1
W0834-2794, SACD, SG3, 2008228020221, 2008228021546, TR1, 33419, S1
W0834-2795, SACD, PF2, 2008229005925, 2008229010836, TR1, 33433, S1

W0834-2796, SACD, SGS, 2008229024515, 2008229025906, TR1, 33434, S1
W0834-2797, SACD, WPS, 2008229042330, 2008229043706, TR1, 33435, S1
W0834-2798, SACD, WPS, 2008230001142, 2008230002405, TR1, 33447, S1
W0834-2799, SACD, SGS, 2008230015004, 2008230020333, TR1, 33448, S1
W0834-2800, SACD, WPS, 2008230032828, 2008230034201, TR1, 33449, S1

7.3 Update schedule example u-file format (single spaced and no spaces between commas)

W0834-2777, SACD, SGS, 2008224004833, 2008224010038, TR1, 33360, S1
W0834-2778, SACD, WPS, 2008224022647, 2008224024013, TR1, 33361, S1
,SACD, SGS, 2008224023647, 2008224025013, TR1, 33361, S1
W0834-2779, SACD, SGS, 2008224040508, 2008224041842, TR1, 33362, S1
W0834-2780, SACD, WPS, 2008224054258, 2008224055618, TR1, 33363, S1
W0834-2781, SACD, SGS, 2008224235311, 2008225000525, TR1, 33374, S1
W0834-2782, SACD, WPS, 2008225013134, 2008225014449, TR1, 33375, S1
W0834-2783, SACD, SGS, 2008225031001, 2008225032328, TR1, 33376, S1
W0834-2784, SACD, WPS, 2008225044755, 2008225050127, TR1, 33377, S1
W0834-2785, SACD, MGS, 2008226002757, 2008226003806, TR1, 33389, S1
W0834-2786, SACD, SGS, 2008226021433, 2008226022757, TR1, 33390, S1
W0834-2787, SACD, ASF, 2008226035259, 2008226040629, TR1, 33391, S1
W0834-2788, SACD, SGS, 2008226053051, 2008226054408, TR1, 33392, S1
W0834-2789, SACD, SGS, 2008227011920, 2008227013218, TR1, 33404, S1
W0834-2790, SACD, WPS, 2008227025736, 2008227031121, TR1, 33405, S1
W0834-2791, SACD, SGS, 2008227043547, 2008227044917, TR1, 33406, S1
W0834-2792, SACD, WPS, 2008227061318, 2008227062648, TR1, 33407, S1
W0834-2793, SACD, SGS, 2008228002401, 2008228003616, TR1, 33418, S1
W0834-2794, SACD, SG3, 2008228020221, 2008228021546, TR1, 33419, S1
W0834-2795, SACD, PF2, 2008229005925, 2008229010836, TR1, 33433, S1
W0834-2796, SACD, SGS, 2008229024515, 2008229025906, TR1, 33434, S1
W0834-2797, SACD, WPS, 2008229042330, 2008229043706, TR1, 33435, S1
W0834-2798, SACD, WPS, 2008230001142, 2008230002405, TR1, 33447, S1
W0834-2799, SACD, SGS, 2008230015004, 2008230020333, TR1, 33448, S1
W0834-2800, SACD, WPS, 2008230032828, 2008230034201, TR1, 33449, S1

7.4 Forecast Schedule Example s-file (single spaced and no spaces between commas)

W0834-2777, SACD, SGS, 2008224004833, 2008224010038, TR1, 33360, S1
W0834-2778, SACD, WPS, 2008224022647, 2008224024013, TR1, 33361, S1
W0834-2805, SACD, SGS, 2008224023647, 2008224025013, TR1, 33361, S1
W0834-2779, SACD, SGS, 2008224040508, 2008224041842, TR1, 33362, S1
W0834-2780, SACD, WPS, 2008224054258, 2008224055618, TR1, 33363, S1
W0834-2781, SACD, SGS, 2008224235311, 2008225000525, TR1, 33374, S1
W0834-2782, SACD, WPS, 2008225013134, 2008225014449, TR1, 33375, S1
W0834-2783, SACD, SGS, 2008225031001, 2008225032328, TR1, 33376, S1
W0834-2784, SACD, WPS, 2008225044755, 2008225050127, TR1, 33377, S1

W0834-2785, SACD, MGS, 2008226002757, 2008226003806, TR1, 33389, S1
W0834-2786, SACD, SGS, 2008226021433, 2008226022757, TR1, 33390, S1
W0834-2787, SACD, ASF, 2008226035259, 2008226040629, TR1, 33391, S1
W0834-2788, SACD, SGS, 2008226053051, 2008226054408, TR1, 33392, S1
W0834-2789, SACD, SGS, 2008227011920, 2008227013218, TR1, 33404, S1
W0834-2790, SACD, WPS, 2008227025736, 2008227031121, TR1, 33405, S1
W0834-2791, SACD, SGS, 2008227043547, 2008227044917, TR1, 33406, S1
W0834-2792, SACD, WPS, 2008227061318, 2008227062648, TR1, 33407, S1
W0834-2793, SACD, SGS, 2008228002401, 2008228003616, TR1, 33418, S1
W0834-2794, SACD, SG3, 2008228020221, 2008228021546, TR1, 33419, S1
W0834-2795, SACD, PF2, 2008229005925, 2008229010836, TR1, 33433, S1
W0834-2796, SACD, SGS, 2008229024515, 2008229025906, TR1, 33434, S1
W0834-2797, SACD, WPS, 2008229042330, 2008229043706, TR1, 33435, S1
W0834-2798, SACD, WPS, 2008230001142, 2008230002405, TR1, 33447, S1
W0834-2799, SACD, SGS, 2008230015004, 2008230020333, TR1, 33448, S1
W0834-2800, SACD, WPS, 2008230032828, 2008230034201, TR1, 33449, S1

7.5 Unavailability Examples are Provided to the MOC by the Ground Network.

The NAM is scheduled unavailability and the GNSTATUS message is unscheduled unavailability.

NAM opened: 03/06/08 00:26:41 GMT.
NAM ID : 519
Network : SN
Expires : 4/10/2008
Status : Open
NAM Title : TDRS-3 (TDRS-275) PERIODIC PAYLOAD PERFORMANCE TESTS
Advisory Message : The purpose of this NAM is to advise the SN Community that TDRS-3 (TDRS-275) SA-1, SA-2, and MAF/R Payload Performance Tests will be conducted during the following time frames:
DOY-099/2130-2330Z: TDRS-3 SA-1 (SA-1 NOT AVAILABLE)
DOY-099/2330-0130Z: TDRS-3 SA-2 (SA-2 NOT AVAILABLE)
DOY-100/0130-0315Z: TDRS-3 MAF/R SVC (MAF/R SVC NOT AVAILABLE)
This activity also requires No TDRS-3 (TDRS-275) DAS and DAT available time of DOY-100/0130-0300Z.

GNSTATUS Message

```
FROM: ASF Operations
TO: GNSTAT

A. SUBJECT: SAFS is GREEN
B. START OF ANOMALY: 224T04:00
C. ETRO: Good To Go.
D. CHANGE OF STATUS: We are GREEN on SAFS.
E. EQUIPMENT AFFECTED: SAFS
F. TYPE OF PROBLEM:  SAFS Data Distribution System G. COMMENTS: SAFS has been
rebooted and is sending files out.
```